PSU - RMNC
4TH FLOOR SPHR
INTERIOR REMODEL

PSU CAMPUS | BLOCK: 087
1600 SW 4TH AVENUE
PORTLAND, OR 97201

Structural Calculations
Project No. 26-011
September 4th, 2026

Submitted to:
Facilities and Planning-FAP
617 SW Montgomery Street
Portland, OR 97201

Submitted by:
NBZ Consulting Engineers
21617 SW Susan Lane
Beaverton, OR 97003

NBZ
CONSULTING ENGINEERS

21617 SW Susan Lane Beaverton, OR 97003
Ph: 971- 222- 4378 Fax: 503- 848- 8748

STRUCTURAL CALCULATIONS

Project: PSU-RNMC 4th Floor SPHR Interior Remodel

Location: PSU Campus | Block:0 87
1600 SW 4th Avenue
Portland, OR 97201

Client: Carrie Ficek | Gerald Gotschall
Facilities and Planning-FAP
617 SW Montgomery Street
Portland, OR 97201

Job No.: 26-011

Date: September 4th, 2026

Dear Carrie and Gerald,

Attached please find calculations pages 1 through 64, which verify the structural adequacy of the PSU-RNMC 4th SPHR Interior Remodel located at 1600 SW 4th Avenue in Portland OR. The plans and details are shown on sheets S100 to S503. The design is based on the requirements of the 2025 Oregon Structural Specialty Code and ASCE 7-22.

Sincerely

Nadia Zouyed, PE
Principal
NBZ Consulting Engineers

PSU Campus | Block : 087
1600 SW 4th Avenue
Portland, OR 97201

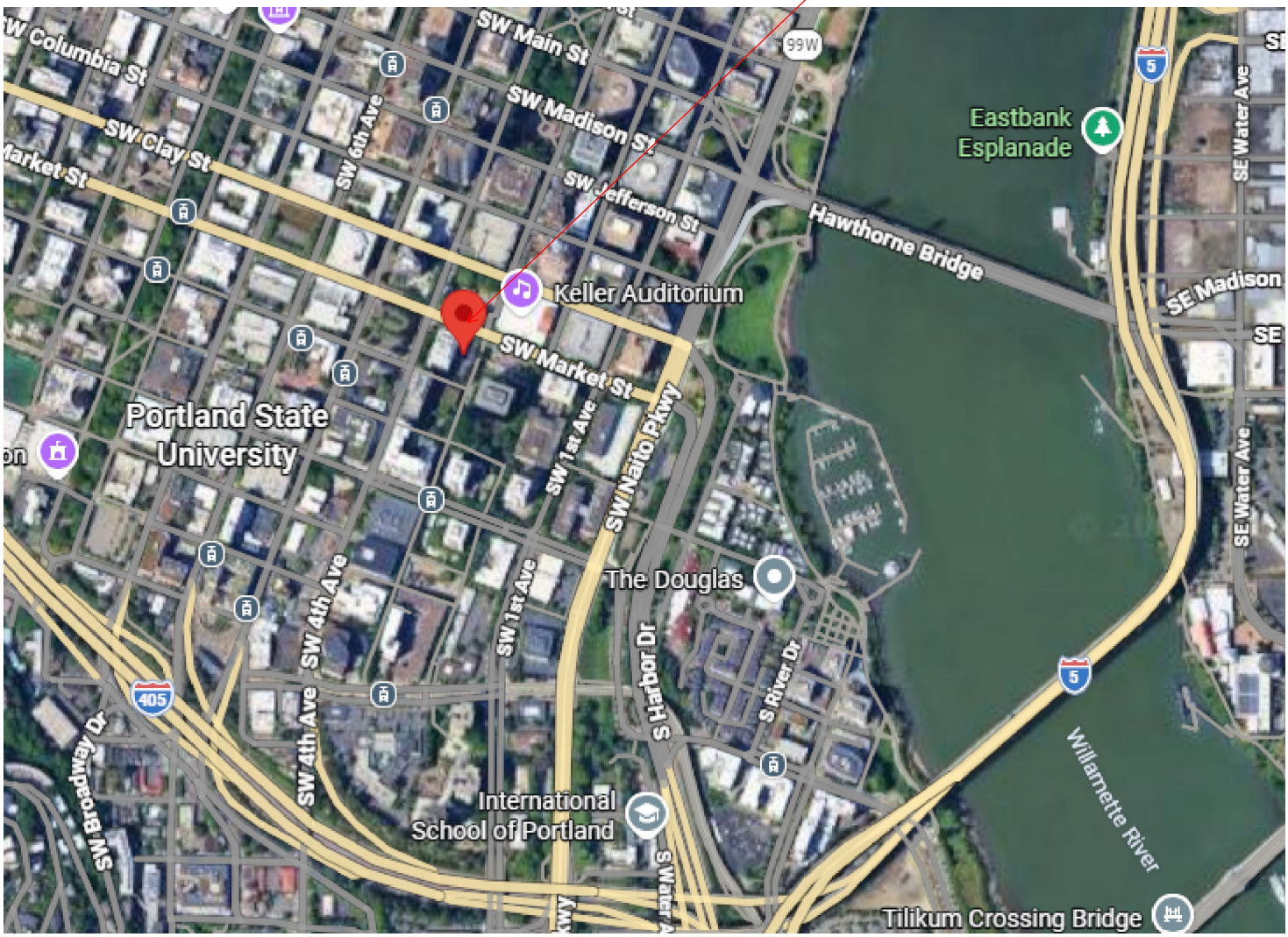

PSU-RNMC SITE LOCATION

ASCE Hazards Report

Address:
1600 SW 4th Ave
Portland, Oregon
97201

Standard: ASCE/SEI 7-22
Risk Category: II
Soil Class: Default

Latitude: 45.51201
Longitude: -122.679489
Elevation: 101.67634092752732 ft (NAVD 88)

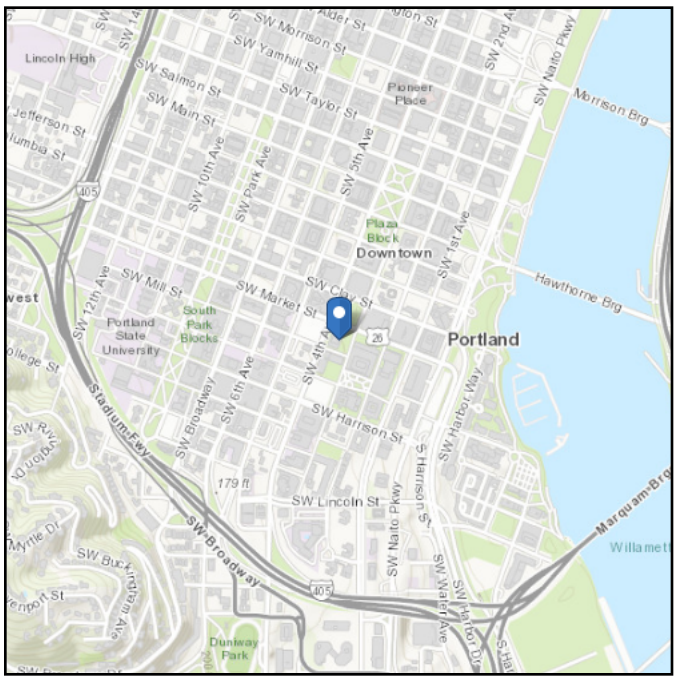

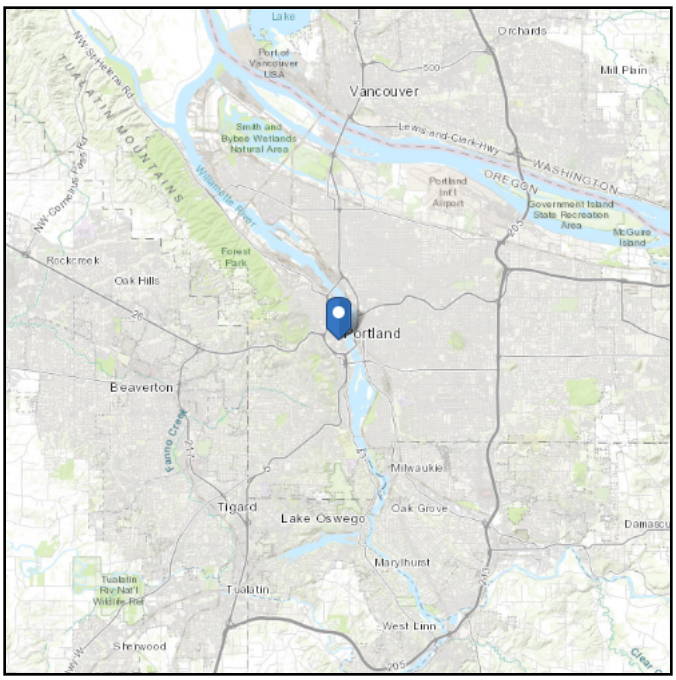

Wind

Results:

Wind Speed	97 Vmph
10-year MRI	67 Vmph
25-year MRI	73 Vmph
50-year MRI	77 Vmph
100-year MRI	82 Vmph
300-year MRI	91 Vmph
700-year MRI	97 Vmph
1,700-year MRI	103 Vmph
3,000-year MRI	107 Vmph
10,000-year MRI	116 Vmph
100,000-year MRI	134 Vmph
1,000,000-year MRI	152 Vmph

Data Source: ASCE/SEI 7-22, Fig. 26.5-1B and Figs. CC.2-1–CC.2-4, and Section 26.5.2
Date Accessed: Tue May 12 2026

Value provided is 3-second gust wind speeds at 33 ft above ground for Exposure C Category, based on linear interpolation between contours. Wind speeds are interpolated in accordance with the 7-22 Standard. Wind speeds correspond to approximately a 7% probability of exceedance in 50 years (annual exceedance probability = 0.00143, MRI = 700 years). Values for 10-year MRI, 25-year MRI, 50-year MRI and 100-year MRI are Service Level wind speeds, all other wind speeds are Ultimate wind speeds.

Site is not in a hurricane-prone region as defined in ASCE/SEI 7-22 Section 26.2.

Seismic

Site Soil Class: Default

Results:

PGA_M :	0.5	T_L :	16
S_{MS} :	1.16	S_S :	0.95
S_{M1} :	0.79	S_1 :	0.36
S_{DS} :	0.77	V_{S30} :	260
S_{D1} :	0.52		

Seismic Design Category: D

Multi-Period MCE_R Spectrum

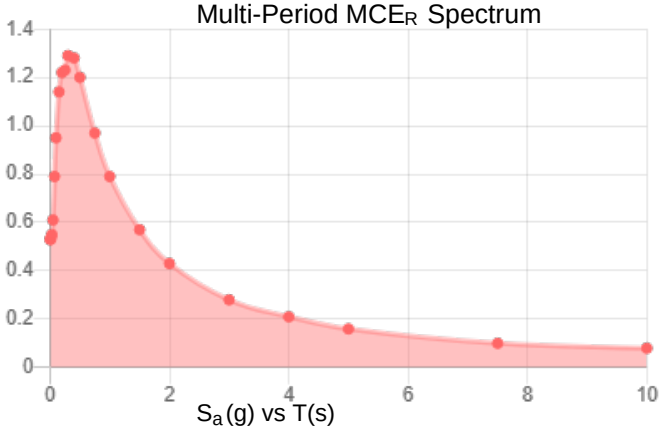

Multi-Period Design Spectrum

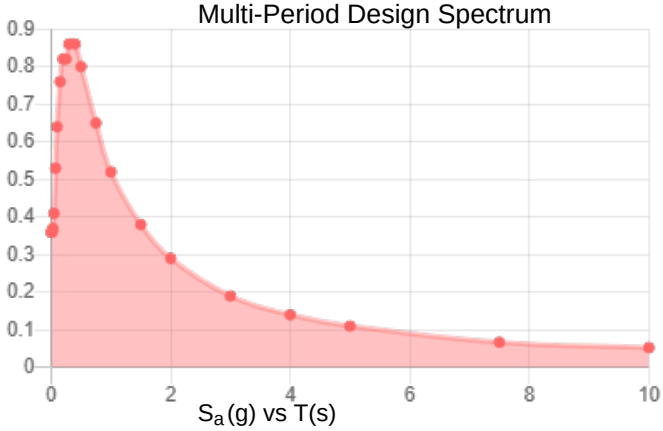

Two-Period MCE_R Spectrum

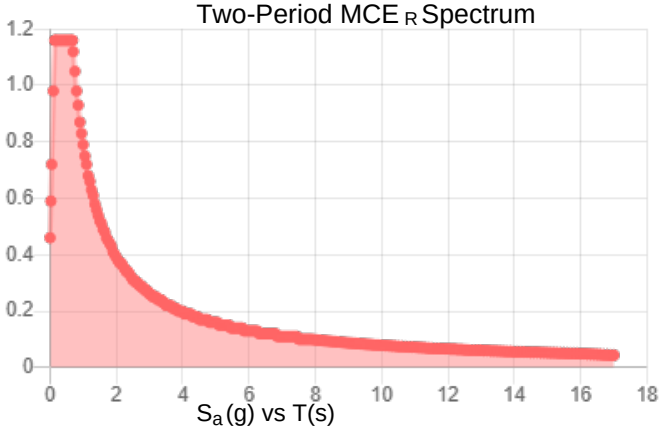

Two-Period Design Spectrum

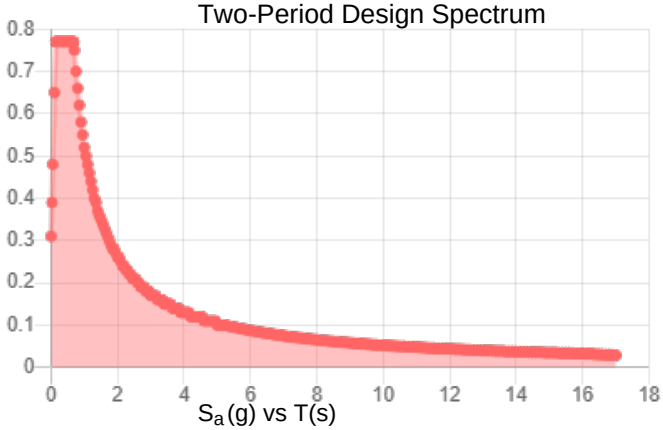

MCE_R Vertical Response Spectrum

Vertical ground motion data has not yet been made available by USGS.

Design Vertical Response Spectrum

Vertical ground motion data has not yet been made available by USGS.

Data Accessed: Tue May 12 2026

Date Source:
USGS Seismic Design Maps based on ASCE/SEI 7-22 and ASCE/SEI 7-22 Table 1.5-2. Additional data for site-specific ground motion procedures in accordance with ASCE/SEI 7-22 Ch. 21 are available from USGS.

The ASCE Hazard Tool is provided for your convenience, for informational purposes only, and is provided “as is” and without warranties of any kind. The location data included herein has been obtained from information developed, produced, and maintained by third party providers; or has been extrapolated from maps incorporated in the ASCE standard. While ASCE has made every effort to use data obtained from reliable sources or methodologies, ASCE does not make any representations or warranties as to the accuracy, completeness, reliability, currency, or quality of any data provided herein. Any third-party links provided by this Tool should not be construed as an endorsement, affiliation, relationship, or sponsorship of such third-party content by or from ASCE.

ASCE does not intend, nor should anyone interpret, the results provided by this Tool to replace the sound judgment of a competent professional, having knowledge and experience in the appropriate field(s) of practice, nor to substitute for the standard of care required of such professionals in interpreting and applying the contents of this Tool or the ASCE standard.

In using this Tool, you expressly assume all risks associated with your use. Under no circumstances shall ASCE or its officers, directors, employees, members, affiliates, or agents be liable to you or any other person for any direct, indirect, special, incidental, or consequential damages arising from or related to your use of, or reliance on, the Tool or any information obtained therein. To the fullest extent permitted by law, you agree to release and hold harmless ASCE from any and all liability of any nature arising out of or resulting from any use of data provided by the ASCE Hazard Tool.

NBZ
Consulting Engineers
ph: 971.222.4378
fx: 503.848.8748

JOB:	RMNC 4th Floor		
SHEET NO.:		OF	
CALCULATED BY:	HZ	DATE	9/2/26
CHECKED BY:		DATE	
PROJECT NO.:	26-011		

SEISMIC LOADS

ASCE 7-22 Sec. 13.3

Seismic Demands for Nonstructural Components

SEISMIC DESIGN FORCE FORMULAS

$F_p^* = 0.4\ S_{ds} * I_p * W_p * [H_f / R_u] * [C_{ar} / R_{po}] * 0.7$

$F_{p\ min} = 0.3 * S_{ds} * I_p * W_p * 0.7$

$F_{p\ max} = 1.6 * S_{ds} * I_p * W_p * 0.7$

Vertical seismic $= 0.2 * S_{ds} * W_p * 0.7$

0.7 factor for allowable stress design

INPUT DATA

S_{ds}:	Spectral acceleration =	0.77
I_p:	Importance factor =	1.0
H_f:	Force amplification factor=	1.3
R_u:	Structure ductility reduction factor=	1.5
C_{ar}:	Component resonance ductility factor =	1.0
R_{po}:	Component strength factor=	1.5

CALCULATIONS

$F_p^* =$ 0.127 Wp

$F_{p\ min} =$ 0.162 Wp

$F_{p\ max} =$ 0.862 Wp

$F_{ph} =$	0.162 Wp	controlling Fp	(ASD)
$F_{pv} =$	0.108 Wp		(ASD)
$F_{ph} =$	0.231 Wp	controlling Fp	(LRFD)
$F_{pv} =$	0.154 Wp		(LRFD)

NBZ
Consulting Engineers
ph: 971.222.4378
fx: 503.848.8748

JOB:	Sound Booth		
SHEET NO.:		OF	
CALCULATED BY:	hz	DATE	8/30/26
CHECKED BY:		DATE	
PROJECT NO.:	26-011		

LATERAL ANALYSIS (SEISMIC LOADS) - ASD

Equipment Data — Sound Booth-1

Wp:	3650	lbs
L:	108	in
w:	102	in (between anchor holes)
h:	42	in
Height to C.G., Hc.g. =	42	in
Eccentricity ey, (5%) =	5.10	in

Fph =	0.162 x Wp =	591.3	lbs
Fpv =	0.108 x Wp =	394.2	lbs

ASD load combo, 0.6D + E

M_{OT} (overturning) = Fph*Hcg =	24834.6	in-lbs
M_R (resisting) = (0.6Wp - Fpv) *(w/2 - e_y) =	82427.2	in-lbs

Maximum Reactions per side

Tmax = (Mot - MR) / w =	-564.6	lbs
Vmax = Fph / 2 =	295.65	lbs

Maximum Reactions per anchor

n = No. of restraints / side =	4	
Tanchor = Tmax / n =	-141	lbs ==> tension
Vanchor = Vmax / n =	74	lbs ==> shear

SEE HILTI PROFIS FOR ANCHORAGE DESIGN

NBZ
Consulting Engineers
ph: 971.222.4378
fx: 503.848.8748

JOB:	Sound Booth 1		
SHEET NO.:		OF	
CALCULATED BY:	HZ	DATE	8/29/26
CHECKED BY:		DATE	
PROJECT NO.:	26-011		

LATERAL ANALYSIS (SEISMIC LOADS) - LRFD

Equipment Data — Sound Booth-1 Anchorage

Wp:	3650	lbs
L:	108	in
w:	102	in (between anchor holes)
h:	84	in
Height to C.G., Hc.g. =	42	in
Eccentricity ey, (5%) =	5.10	in

Fph =	0.231 x Wp x 1.75 =	1475.5125 lbs	includes 1.75 omega factor
Fpv =	0.154 x Wp =	562.1 lbs	

LRFD load combo, 0.9D + E

M_{OT} (overturning) = Fph*Hcg = 61971.525 in-lbs

M_R (resisting) = (0.9Wp - Fpv) *(w/2 - e_y) = 124981.1 in-lbs

Maximum Reactions per side

Tmax = (Mot - MR) / w = -617.7 lbs

Vmax = Fph / 2 = 737.75625 lbs

Maximum Reactions per anchor

n = No. of restraints / side = 4

Tanchor = Tmax / n = -154 lbs ==> tension

Vanchor = Vmax / n = 184 lbs ==> shear

SEE HILTI PROFIS FOR ANCHORAGE DESIGN

NBZ
Consulting Engineers
ph: 971.222.4378
fx: 503.848.8748

JOB:	Sound Booth 2		
SHEET NO.:		OF	
CALCULATED BY:	HZ	DATE	8/30/26
CHECKED BY:		DATE	
PROJECT NO.:	26-011		

LATERAL ANALYSIS (SEISMIC LOADS) - LRFD

Equipment Data — Sound Booth-2 Anchorage

Wp:	2900	lbs
L:	84	in
w:	78	in (between anchor holes)
h:	84	in
Height to C.G., Hc.g. =	42	in
Eccentricity ey, (5%) =	3.90	in

Fph =	0.231 x Wp x 1.75 =	1172.325 lbs	includes 1.75 omega factor
Fpv =	0.154 x Wp =	446.6 lbs	

LRFD load combo, 0.9D + E

M_{OT} (overturning) = Fph*Hcg = 49237.65 in-lbs

M_R (resisting) = (0.9Wp - Fpv) *(w/2 - e_y) = 75935.3 in-lbs

Maximum Reactions per side

Tmax = (Mot - MR) / w = -342.3 lbs

Vmax = Fph / 2 = 586.1625 lbs

Maximum Reactions per anchor

n = No. of restraints / side = 4

Tanchor = Tmax / n = -86 lbs ==> tension

Vanchor = Vmax / n = 147 lbs ==> shear

SEE HILTI PROFIS FOR ANCHORAGE DESIGN

SOUND BOOTH ANCHORAGE:

SOUND BOOTH # 1300

WT = 3650 lbs

LRFD SEISMIC FORCES (SEE PAGE

F_{PH} = 1476 lbs
F_{PV} = 562 lbs
} SEE P3

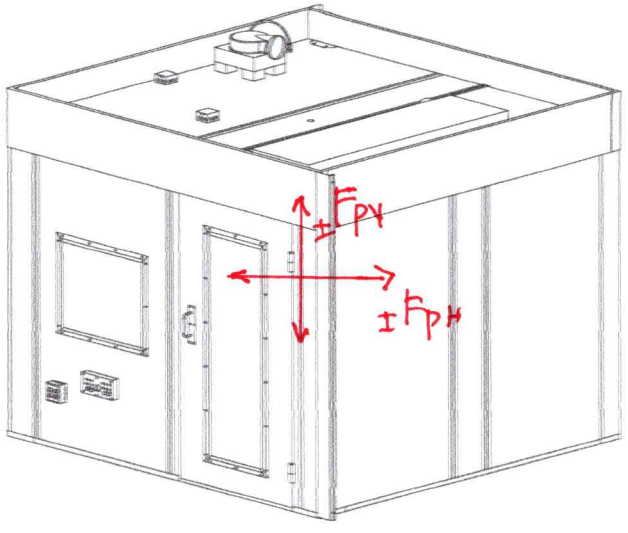

1 SOUND BOOTH #1300 ELEVATION
3/4" = 1'-0"

* ANCHORAGE DESIGN:

TENSION T/CONN = -154 lbs
SHEAR V/CONN = 184 lbs
} SEE P3

USE 3/8" ϕ HILTI KB TZ2 W/1 1/2" EMB

SEE HILTI PROFIS OUTPUT P22-27

* CHECK 3/8" ϕ BOLT BENDING

ASD → V = 74 lbs (SEE P 2)

$M = 74 \times 1/2 = 37$ lbs-in

$$f_b = \frac{M}{S} = \frac{0.074}{\frac{(3.14)(3/8)^3}{32}} = 14.3 \text{ ksi ok}$$

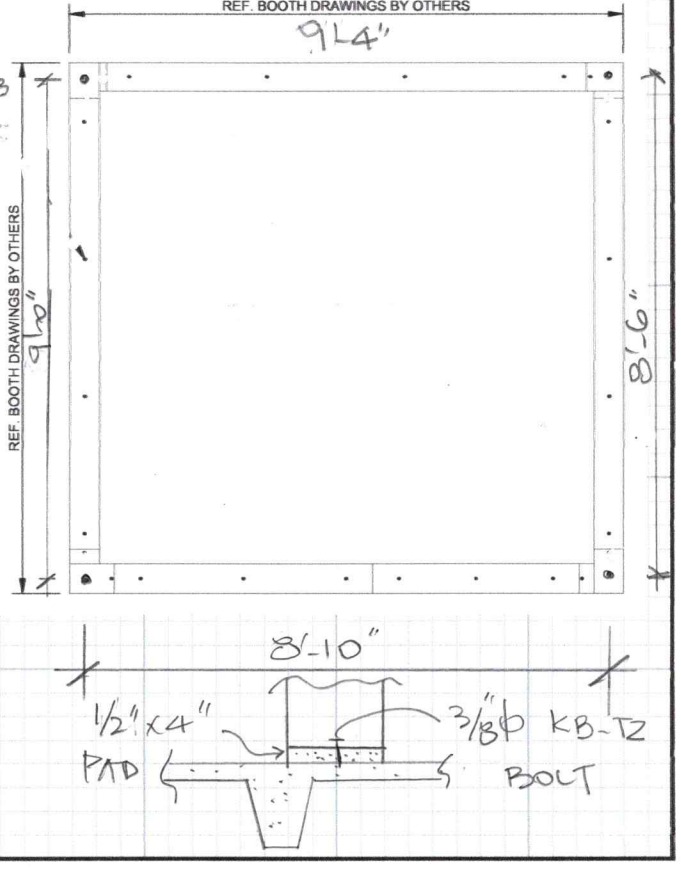

NBZ
Consulting Engineers
ph: 971.222.4378
fx: 503.848.8748

Project:	PSU-RNMC - 4TH FLOOR SPHR INTERIOR REMODEL		Sheet # 6
Location:	PORTLAND, OR		
Client:	PSU		Job # 26-011
Date:	09/2026	By: H.Z.	

SOUND BOOTH # 1301

$W = 2900$ lbs

LRFD SEISMIC FORCES:
(SEE PAGE 4)

$F_{PH} = 1172$ lbs
$F_{PV} = 447$ lbs
} SEE P4

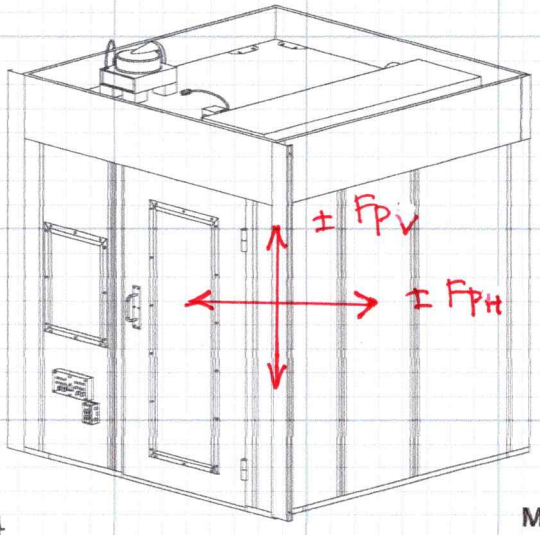

③ SOUND BOOTH #1301 ELEVATION
3/4" = 1'-0"

MAX

*ANCHORAGE DESIGN:

TENSION T/CONN = - 86 lbs
SHEAR V/CONN = +147 lbs
} SEE P4

USE 3/8" ϕ HILTI KB TZ 2 w/ 1½ EMB
(SEE HILTI PROFIS OUTPUT P 22-27

REF SOUND BOOTH 1300, page 5
FOR ADD'L INFO.

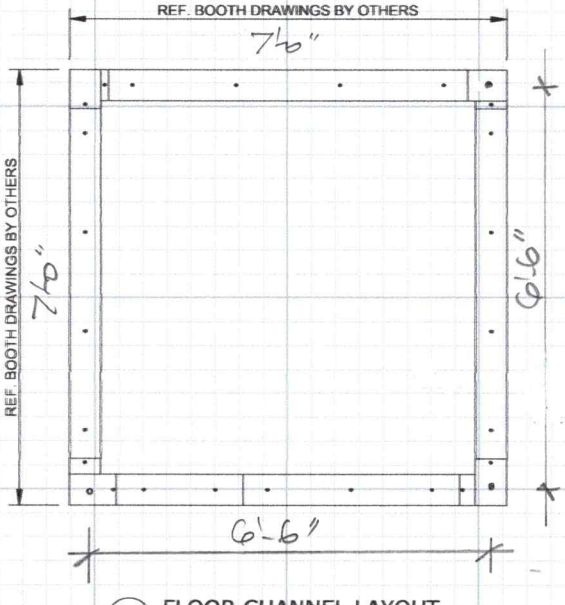

④ FLOOR CHANNEL LAYOUT
3/4" = 1'-0"

NBZ
Consulting Engineers
ph: 971.222.4378
fx: 503.848.8748

Project:	PSU - RNMC : 4TH FLOOR SPHR INTERIOR REMODEL		Sheet # 7
Location:	PORTLAND, OR		
Client:	PSU		Job # 26-011
Date:	09/2026	By: H.Z.	

CHECK WAFFLE SLAB CAPACITY :

AVERAGE SPAN : 30'-6"

CONCRETE STRENGTH:

f'_c = 3000 psi

REINFORCEMENT:

f_y = 60 ksi

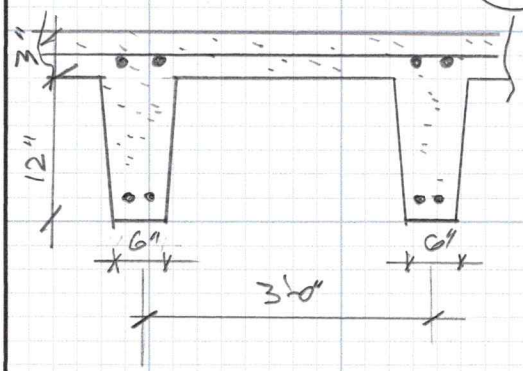

SOUND BOOTH SB 1300:

WT = 3650 lbs (CONTROLS)

SOUND BOOTH SB 1301:

WT = 2900 lbs

TYPICAL LIVE LOAD: 50 psf

CORRIDORS: 100 psf

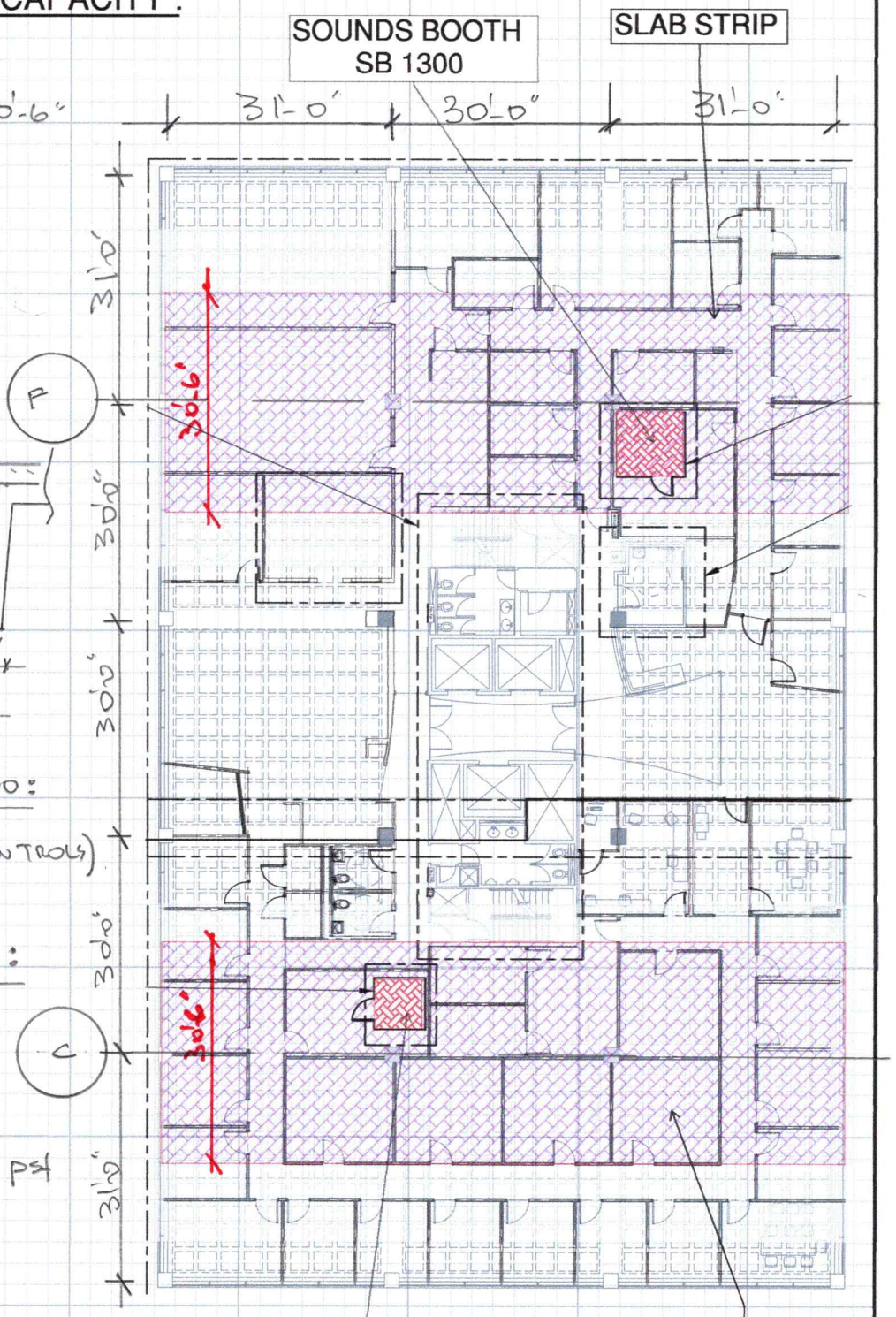

NBZ
Consulting Engineers
ph: 971.222.4378
fx: 503.848.8748

Project:	PSU - RNMC : 4TH FLOOR SPHR INTERIOR REMODEL		Sheet # 8
Location:	PORTLAND, OR		
Client:	PSU		Job # 26-011
Date:	09/2026	By: H.Z.	

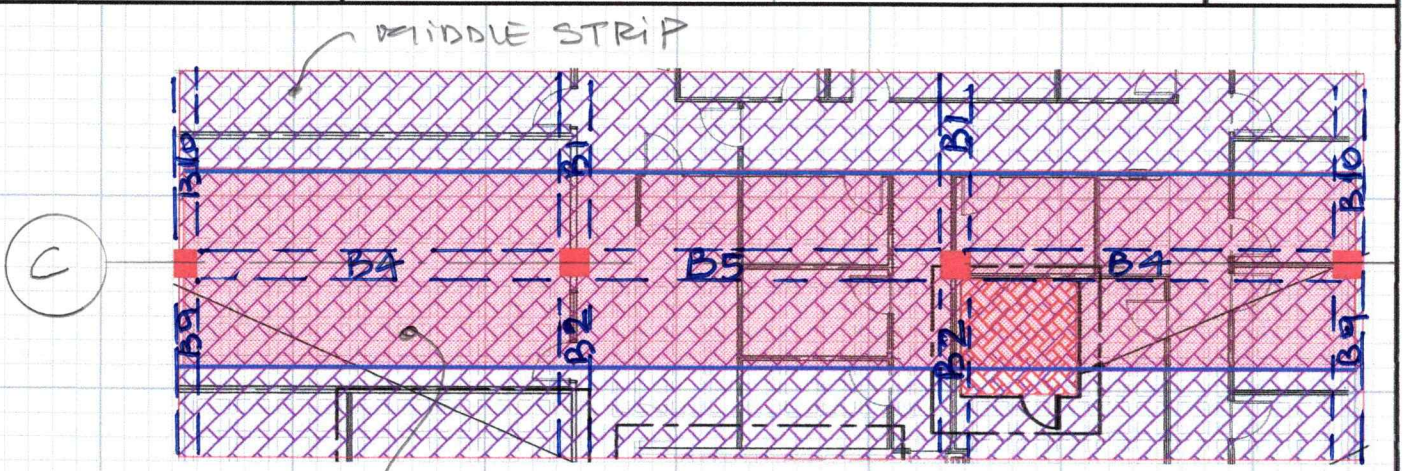

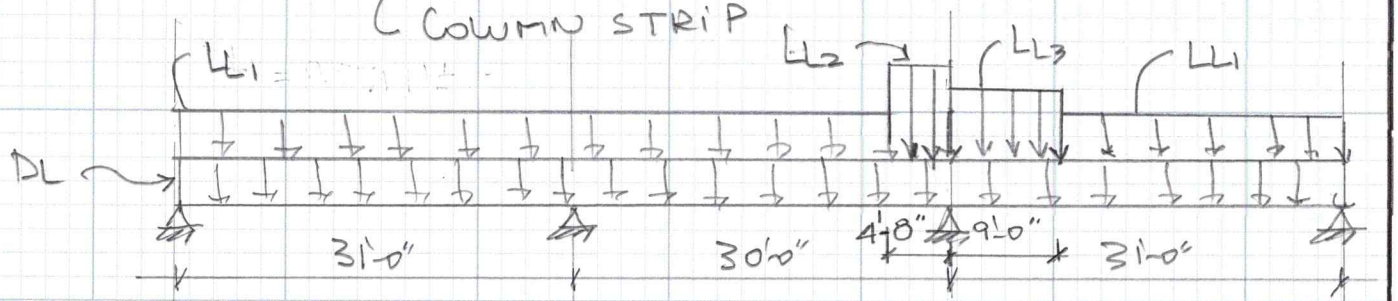

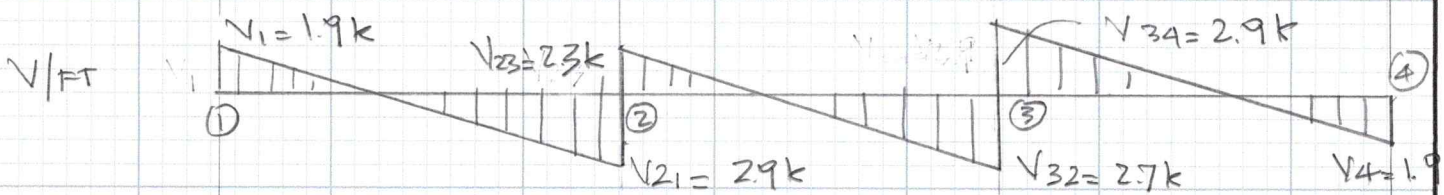

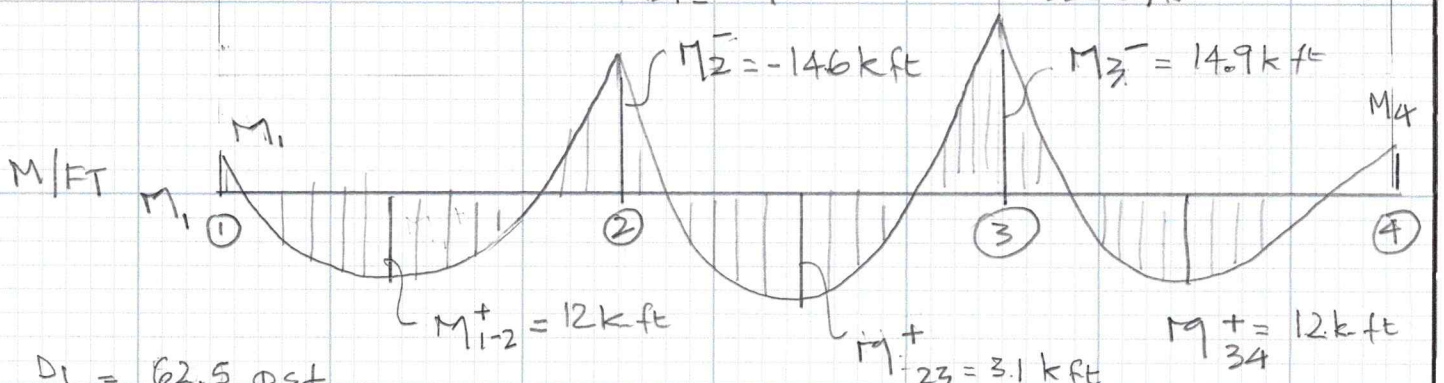

DL = 62.5 psf

LL1 = 50 psf

LL2 = 100 psf

$LL_3 = \frac{50+60}{2} = 55$ psf (SOUND BOOTH SB130 CONTROLS)

(SEE RISA OUTPUT PAGES 28-32

NBZ
Consulting Engineers
ph: 971.222.4378
fx: 503.848.8748

Project:	PSU - RNMC : 4TH FLOOR SPHR INTERIOR REMODEL		Sheet # 9
Location:	PORTLAND, OR		
Client:	PSU		Job # 26-011
Date:	09/2026	By: H.Z.	

WAFFLE SLAB DL = 56 psf

TYPICAL LIVE LOAD: 50 psf

CORRIDOR LIVE LOAD: 100 psf] SLAB WAS DESIGNED BASED ON THESE LOADS

* SOUND BOOTH #1300 lbs: DL = 3650 lbs

DIMS: 9'-4" x 9'-0"

AVERAGE ADD'L LL = $\frac{3650}{9.33 \times 9.0}$ = 43 psf

* SOUND BOOTH #1301: DL = 2900 lbs

AVERAGE ADD'L LL = $\frac{2900}{70' \times 76'}$ = 60 psf (CONTROLS) DESIGN

BEAM #	B (in)	D (in)	BOT REIN	TOP REINF	STIRRUPS
B1	36	20	(6) #9	(3) #9	#3 @ 6" O.C. & #3 @ 8" O.C
B2	60	20	(9) #9	(6) #9	#3 @ 6" O.C & #3 @ 8" O.C.
B4	36	20	(3) #8 (3) #7	(4) #8	#3 @ 6" O.C. & #3 @ 8" O.C.
B5	36	20	(3) #8 (3) #7	(9) #9	#3 @ 8" O.C.
B9	20	48	(2) #10 (2) #11	(2) #10 (2) #11	#3 @ 8" O.C.
B10	20	48	(2) #10 (2) #11	(2) #10 (2) #11	#3 @ 8" O.C.

CHECK BENDING & SHEAR CAPACITY AT SPAN 3-4: (END SPAN)

* BENDING:

AT SUPPORT M_{max} = 14.9 k-ft / ft (FACTORED)

* AT COLUMN STRIP: M_{max} = 70% (14.9 x 30.5) = 318 k-ft

* AT MIDDLE STRIP: M_{max} = 25% (14.9 x 30.5) = 136 k-ft

CHECK CAPACITY AT COLUMN STRIP:

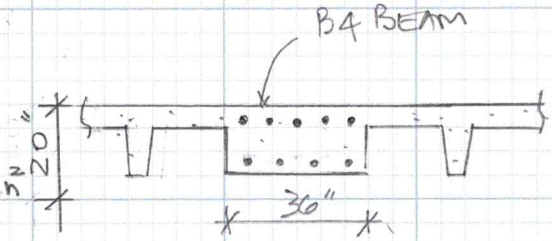

$$A_{s_{Req}} = \frac{M_u}{\phi j d F_y} = \frac{(318)(12)}{(0.9)(.9)(17.5)(60)} = 4.50\ in^2$$

$A_{s\,provided} = (5)\#9 = 5.0\ in^2 > A_{s\,req} = 4.50\ in^2$ OK

CHECK CAPACITY AT MIDDLE STRIP:

$$A_{s_{Req}} = \frac{M_u}{\phi j d F_y} = \frac{(136)(12)}{(0.9)(0.9)(18.0)(60)} = 1.86\ in^2$$

$A_{s\,provided}$: [(1) #5 + (1) #4] AT 4 JOISTS EA. SIDE OF BEAM

$A_{s\,provided}$: (4)(0.31) + (4)(0.20) = 2.04 in^2 > $A_{s\,req'd}$ = 1.86 in^2

AT MID-SPAN: M_{max} = 12.0 k-ft/ft (FACTORED)

* AT COLUMN STRIP: M_{max} = 60%(12×30.5) = 219.6 k-ft

* AT MIDDLE STRIP: M_{max} = 40%(12×30.5) = 146.4 k-ft

CHECK CAPACITY AT COLUMN STRIP:

$$A_{s\,Req} = \frac{M_U}{\phi j d F_y} = \frac{(219.6)(12)}{(0.9)(0.9)(17.5)(60)} = 3.10\ in^2$$

A_s provided = (3)(0.79) + (3)(0.6) = 4.17 in^2 > $A_{s\,Req'd}$ = 3.10 in^2 ok

CHECK CAPACITY AT MIDDLE STRIP:

$$A_{s\,Req} = \frac{M_U}{\phi j d F_y} = \frac{(146.4)(12)}{(0.9)(0.9)(18)(60)} = 2.0\ in^2$$

A_s provided = (8)(0.31) = 2.48 in^2 > $A_{s\,Req}$ = 2.0 in^2 OK

CHECK SHEAR CAPACITY

V_U = (2.9)(30.5) = 88.5k (FACTORED)

ASSUME ALL SHEAR RESISTED BY BEAM B4

$V_n = V_c + V_s$

$= \phi 2\sqrt{f'_c}\, b_w d + \frac{A_v f_{yt} d}{s}$

$= (0.75)(2)\sqrt{4000}(36)(18) + \frac{(2)(0.11)(60)(18)}{6} = 101$ kips

V_U = 88.5 + 39.6 = 128 kips > V_U = 88.5k OK

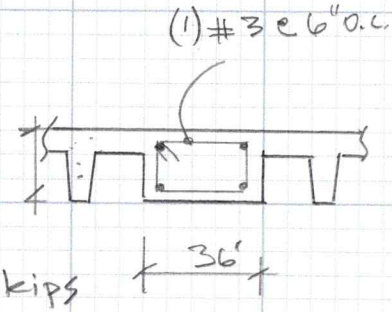

NBZ
Consulting Engineers
pb: 971.222.4378
fx: 503.848.8748

Project:	PSU - RNMC : 4TH FLOOR SPHR INTERIOR REMODEL		Sheet # 12
Location:	PORTLAND, OR		
Client:	PSU		Job # 26-011
Date:	09/2026	By: H.Z.	

TYPICAL FULL HEIGTH STUD:

NON-ACOUSTICAL WALL:

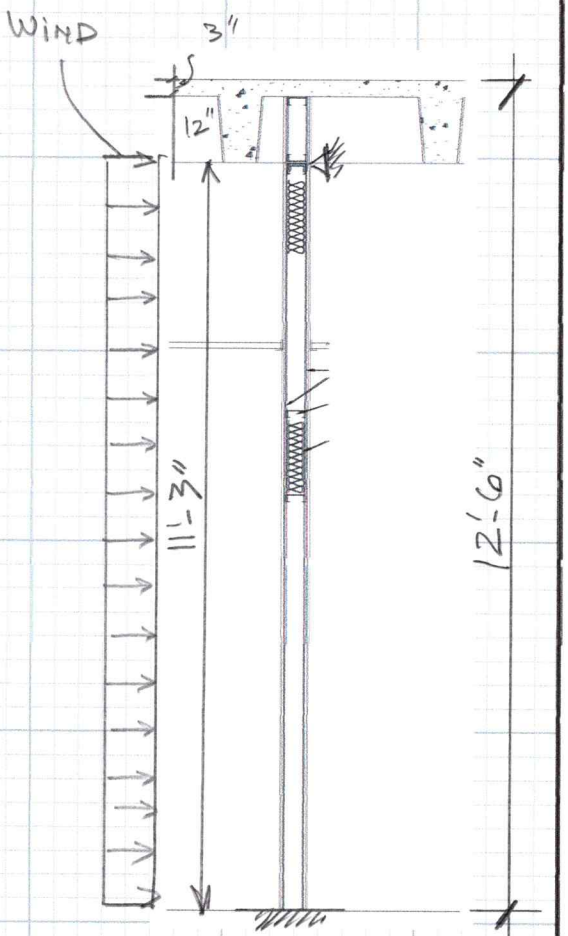

INTERIOR WIND PRESSURE : 5 psf

$W = (5)(16/12) = 6.70$ plf

$M = wl^2/8 = (0.067)(11.25)^2/8 = 1.06$ k ft

$S_x = \frac{M}{F_b} = \frac{1.06}{(0.6)(33)} = 0.053\ in^3$

TRY 5/8" STUD : 362S125-30

$S_x = 0.21\ in^3$

$I_x = 0.381\ in^4$

$\Delta_{max} = \frac{5wl^4}{384EI} = \frac{(5)(0.0067)(11.25\times12)^4}{(384)(29000)(0.381)(12)} = 0.218" < \Delta_{All} = \frac{L}{240} = \frac{(11.25)(12)}{240} = 0.56"$

USE 362S125-30 @16" O.C.

ACOUSTICAL WALLS:

AS REQUEST VERIFY IF 5/8" STUD CAN BE SPACED AT 24" O.C.

$W = (5)(2) = 10$ psf

$M = wl^2/8 = \frac{(0.1)(11.25)^2}{8} = 0.158$ k ft

$f_b = \frac{(0.158)(12)}{0.21} = 9\ ksi < F_b = 0.6F_y = 19.8\ ksi$ OK

USE 362S125-30 AT 24" O.C AT ACOUSTICAL WALLS ONLY

$\Delta_{max} = \frac{5wl^4}{384EI} = \frac{(5)(0.01)(11.25\times12)^4}{(384)(29000)(0.381} = 0.32" < \Delta_{all} = \frac{L}{240} = 0.563"$

NBZ
Consulting Engineers
ph: 971.222.4378
fx: 503.848.8748

Project:	PSU - RNMC : 4TH FLOOR SPHR INTERIOR REMODEL		Sheet # 13
Location:	PORTLAND, OR		
Client:	PSU		Job # 26-011
Date:	09/2026	By: H.Z.	

TYPICAL PARTIAL HEIGTH STUD:

ALL PARTIAL HEIGHT WALL ARE SPANNING 8'-6" MAX.

USE NON-STRUCTURAL STUD WALLS W/ 362S125-30 AT 16"O.C → ACCEPTABLE

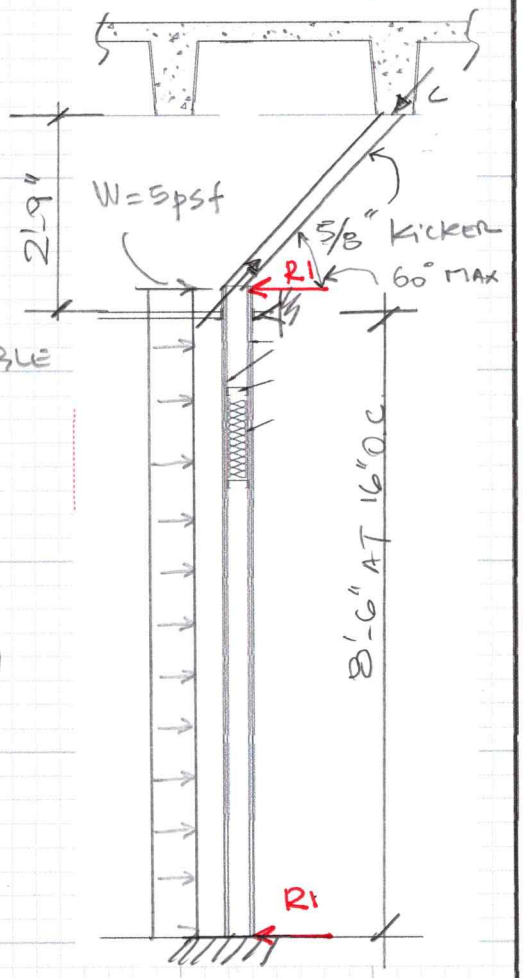

DESIGN KICKER AT 4'0" O.C:

$R_1 = R_2 = \pm(4)(5psf)(8.5/2) = 85$ lbs

COMPRESSION IN KICKER (W/ 60° MAX)

$$C = \frac{84}{\cos 60} = \frac{85}{1/2} = \pm 170 \text{ lbs}$$

KICKE MAX LENGTH: $L = \frac{2.75}{\sin 60} = 3.18$ ft

USE 362S162-43 KICKER AT 4'0" W/(2) 0.157 ϕ PAF

REFERENCE S/S502 -

$T = C \times \cos 30 = (170)(\sqrt{3}/2) = \pm 147$ lbs

$V = C \times \sin 30 = (170)(1/2) = \pm 85$ lbs

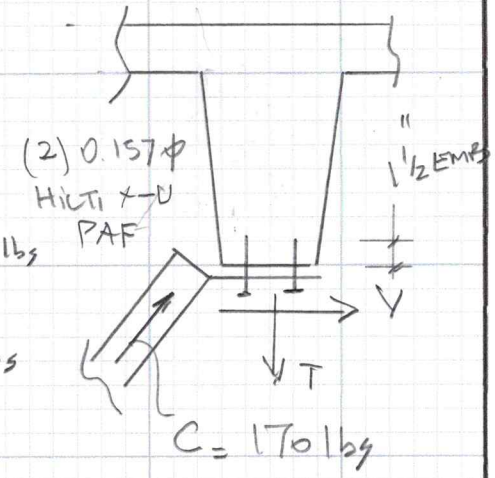

TENSION / FASTENER $= \pm 147/2 = 73.5$ lbs $< T_{all} = 275$ lbs

SHEAR / FASTENER $= \pm 85/2 = 42.5$ lbs $< V_{all} = 420$ lbs

NBZ
Consulting Engineers
ph: 971.222.4378
fx: 503.848.8748

Project:	PSU-RNMC - 4TH FLOOR SPHR INTERIOR REMODEL		Sheet # 14
Location:	PORTLAND, OR		
Client:	PSU		Job # 26-011
Date:	09/2026	By: H.Z.	

TYPICAL HEADER BEAM DESIGN:

MAX SPAN = 6'0"

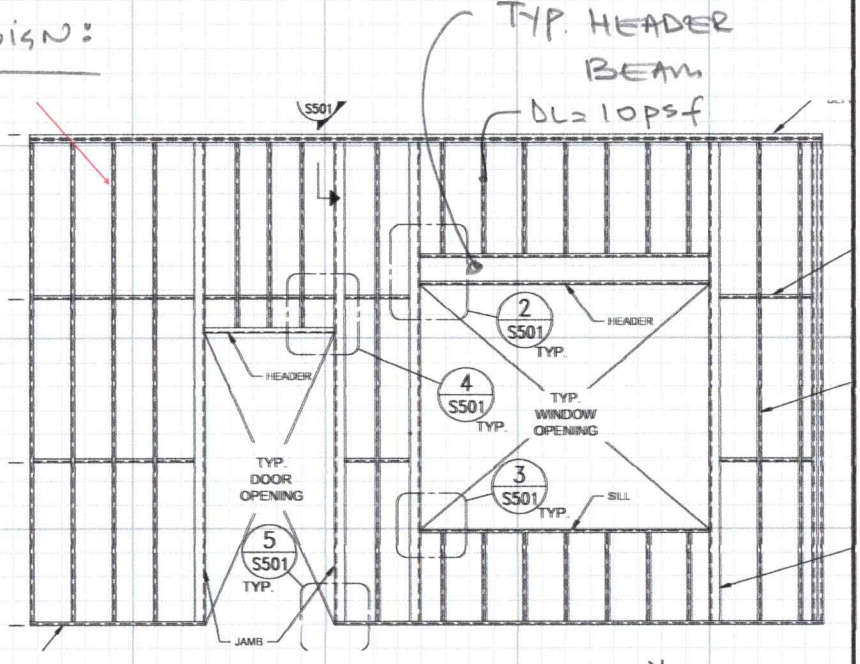

DEAD LOAD:

$w_{DL} = (10psf)(4FT) = 40 plf$

WIND LOAD:

$w_w = (5psf)(9/2) = 23 plf$

$M_w = \frac{(0.023)(6)^2}{8} = 0.104 k\text{-}ft$

$f_{by} = \frac{(0.104)(12)}{1.06} = 1.2 ksi < F_b$

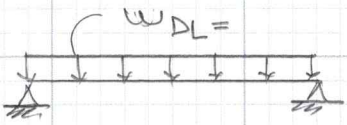

$M_{DL} = \frac{(0.04)(8)^2}{8} = 0.36 k\text{-}ft$

$f_{bx} = \frac{(0.36)(12)}{3.38} = 1.3 ksi$

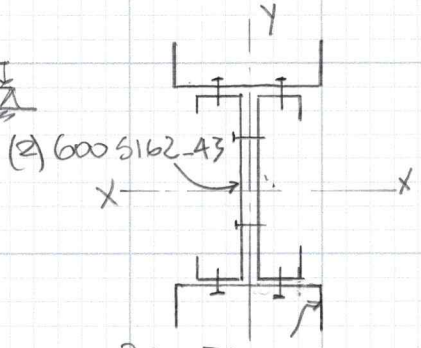

WIND DEFLECTION:

$\Delta_w = \frac{(5)(0.023/12)(6\times12)^4}{(384)(29000)(3.17)} = 0.07" \text{ OK}$

DEAD LOAD DEFLECTION:

$\Delta_{DL} = \frac{(5)(0.045/12)(6\times12)^4}{384 \times 29000 \times 10.13} = 0.005 \text{ OK}$

$I_x = (2)\left[2.316 + 0.064 + 0.298 \times 3^2\right]$

$= 10.13 in^4$

$S_x = \frac{10.13}{3} = 3.38 in^3$

$I_y = (2)\left[0.148 + 1.439\right]$

$= 3.17 in^4$

$S_y = \frac{3.17}{3} = 1.06 in^3$

$F_b = (0.6)(33) = 19.8 ksi$

NBZ
Consulting Engineers
ph: 971.222.4378
fx: 503.848.8748

Project:	PSU - RNMC : 4TH FLOOR SPHR INTERIOR REMODEL		Sheet # 15
Location:	PORTLAND, OR		
Client:	PSU		Job # 26-011
Date:	09/2026	By: H.Z.	

TYPICAL MONITOR SUPPORT:

MONITOR MAX W_T = 200 lbs

$F_{PH} = 0.162\ W_p = 32.4$ lbs

$F_{PV} = 0.108\ W_p = 21.6$ lbs

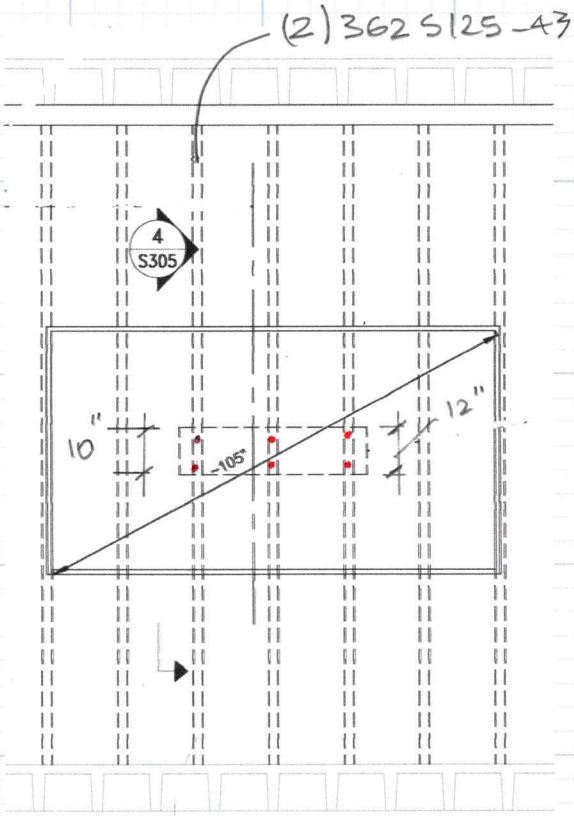

CHECK DOUBLE STUD (WORST CASE):

DL = 200/2 = 100 lbs

F_{PH} = 32.4/2 = 16.2 lbs

F_{PV} = 21.6/2 = 10.8 lbs

$$\text{SHEAR/SCREW} = \frac{100 + 10.8}{2 \times 2} = 27.7 \text{ lbs}$$

$$\text{TENSION/SCREW} = \frac{16.2}{4} + \frac{(100 + 10.8)10}{10 \times 2} = 60 \text{ lbs}$$

USE #12 SMS TO 18GA STUDS:

V_{ALL} = 280 lbs > 27.7 lbs ✓OK

T_{ALL} = 126 lbs > 60 lbs ✓OK

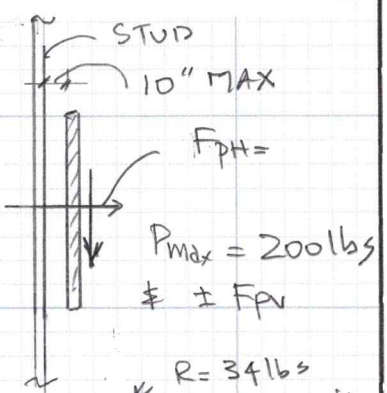

CHECK VERTICAL STUDS:

W_w = 5 x 16/12 = 6.7 plf

M = 0.094 k-ft/2 = 0.047 k-ft (SEE RISA OUTPUT PAGES 33-38)

$$f_b = \frac{0.047 \times 12}{0.298} = 1.9 \text{ ksi}$$

Δ_{max} = 0.055"

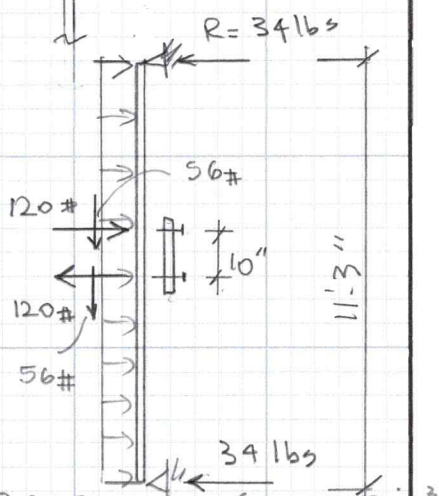

(2) 362S125-43 → S_x = 0.298 in³

NBZ Consulting Engineers ph: 971.222.4378 fx: 503.848.8748	Project: PSU - RNMC : 4TH FLOOR SPHR INTERIOR REMODEL		Sheet # 16
	Location: PORTLAND, OR		
	Client: PSU		Job # 26-011
	Date: 09/2026	By: H.Z.	

CHECK BACKUP PL 12" x 14GA

$M = 0.096 \times 1'' = 0.096$ k-in

$f_b = \frac{M}{S} = \frac{0.096}{8 \times (0.0713)} = 14.2$ ksi ok

USE PL 12" x 14GA x CONT PLATE

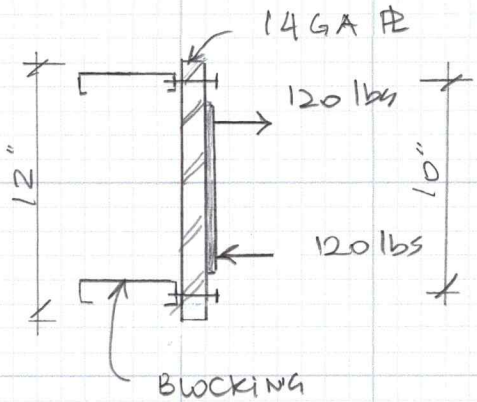

NBZ
Consulting Engineers
ph: 971.222.4378
fx: 503.848.8748

Project:	PSU - RNMC : 4TH FLOOR SPHR INTERIOR REMODEL		Sheet # 17
Location:	PORTLAND, OR		
Client:	PSU		Job # 26-011
Date:	09/2026	By: H.Z.	

LOCKERS SEISMIC BRACING:

ASSUMED DEAD LOADS:

* SELF WEIGHT = 80 lbs
* TOTAL ITEMS = 120 lbs

200 lbs

SEISMIC FORCES PER ASCE7-22:

$F_{PH} = 0.162\ W_p = 0.162 \times 200 = 32.4$ lbs

$F_{PV} = 0.108\ W_p = 0.108 \times 200 = 21.6$ lbs

CONSERVATIVELY ASSUME $F_{PH}/2$ PER CONNECTION TO STUDS:

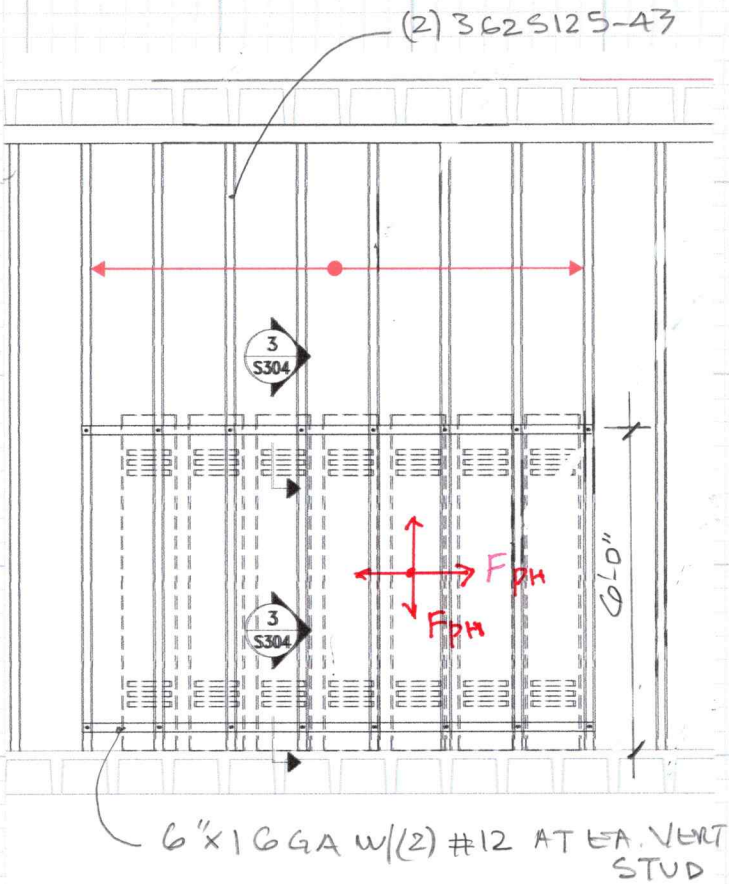

1 TYPICAL LOCKERS SEISMIC BRACING
1/2" = 1'-0"

$$\text{TENSION / SCREW} = \frac{F_{PH}/2}{2} = \frac{32.4}{4} = 8.1 \text{ lbs}$$

* #12 SMS IS ACCEPTABLE
* USE (2) 362S125-43 AT 16" O.C.

CHECK BENDING CAPACITY OF 6"x14GA STEEL STRAP.

$$M = \frac{P \cdot L}{4} = \frac{F_{PH}/2 \times 16}{4} = \frac{32.4 \times 16}{4} = 64.8 \text{ lbs-in}$$

$$f_b = \frac{0.0648}{6 \times \left(\frac{0.0713}{6}\right)} = 12.7 \text{ ksi}$$ OK

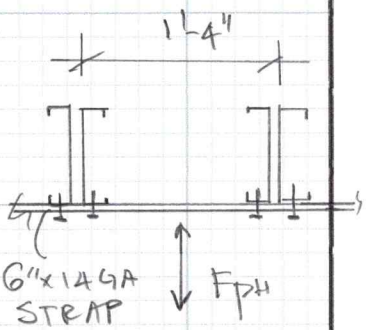

NBZ
Consulting Engineers
ph: 971.222.4378
fx: 503.848.8748

Project:	PSU-RNMC - 4TH FLOOR SPHR INTERIOR REMODEL		Sheet # 18
Location:	PORTLAND, OR		
Client:	PSU		Job # 26-011
Date:	09/2026	By: H.Z.	

UPPER CABINETS SUPPORT:

DESIGN IS BASED ON 125 plf MAX DL:

$W_T = 125 \times 16/12 = 167$ lbs/STUD

$F_{PH} = 0.162\, W_p = 27$ lbs

$F_{PV} = 0.108\, W_p = 18$ lbs

$\text{SHEAR/SCREW} = \frac{167+18}{2\times 4} = 23$ lbs

$\text{TENSION/SCREW} = \frac{27}{2\times 4} + \frac{(167+18)\,16/12}{24\times 4} = 19$ lbs

USE #12 SMS → ACCEPTABLE

USE (2) 362S125-43 ACCEPTABLE, SEE MONITOR SUPPORT CALCS.

* CHECK PLG"x14 :

$P = 19\times 2 = 38$ lbs → ACCEPTABLE PER PREVIOUS CALS - OK

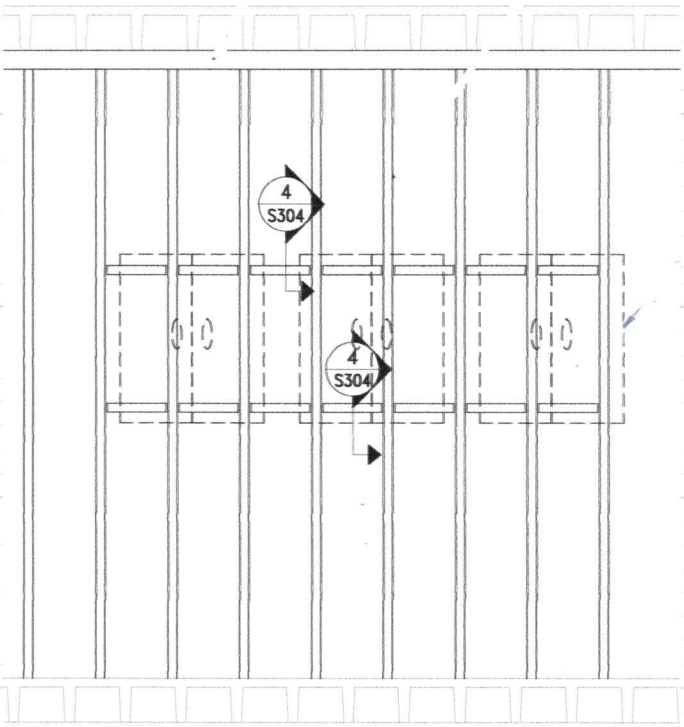

2 TYPICAL CABINETS SEISMIC BRACING
1/2" = 1'-0"

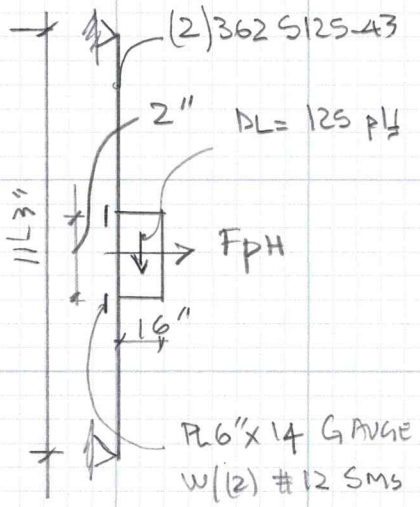

NBZ
Consulting Engineers
ph: 971.222.4378
fx: 503.848.8748

Project:	PSU-RNMC - 4TH FLOOR SPHR INTERIOR REMODEL		Sheet # 19
Location:	PORTLAND, OR		
Client:	PSU		Job # 26-011
Date:	09/2026	By: H.Z.	

TOY WORKROOM SHELVES:

A: WALL MOUNT SHELVES:

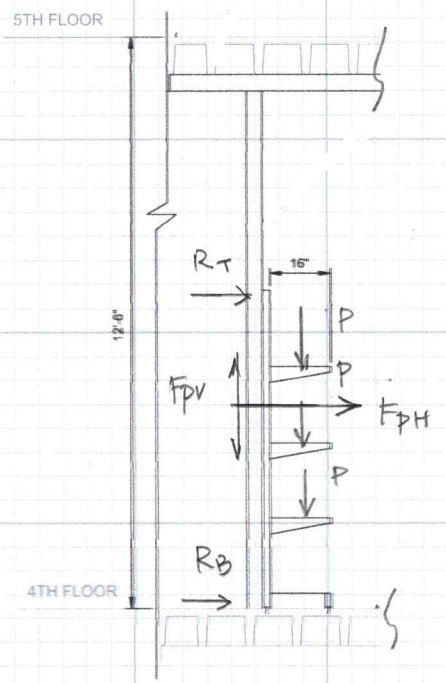

MAXIMUM LOAD/SHELVES: P = 200 lbs

$F_{PH} = 0.231 \times (200) = 46$ lbs

$F_{PV} = 0.154 \times (200) = 31$ lbs

CHECK SHELVE BOT CONNECTION:

CONDITION (1):

LRFD w/ $\Omega = 2$ { SHEAR AT BASE V = 0
TENSION AT BASE T = 180 lbs → SEE RISA OUTPUT PAGES 45-47

CONDITION (2):

SHEAR AT BASE V = 250 lbs

LRFD w/ $\Omega = 2$

TENSION AT BASE T = 0

USE (2) 3/8 ϕ HILTI KB TZ2 W/ 1-½" EMB.

SEE PROFIS OUTPUT - PAGES 54-64 (WORST CASE OCCURS AT DOUBLE SHELVES)

CHECK SHELVE TOP CONNECTION:

VERTICAL POST CONNECTED TO WALL VERTICAL STUD & BLOCKING THROUGH A LOZIER BRACKET BY MANUFACTURER

NBZ
Consulting Engineers
ph: 971.222.4378
fx: 503.848.8748

Project:	PSU - RNMC : 4TH FLOOR SPHR INTERIOR REMODEL		Sheet # 20
Location:	PORTLAND, OR		
Client:	PSU		Job # 26-011
Date:	09/2026	By: H.Z.	

CHECK BACK TO BACK STUDS

$$M = \frac{0.028 \times 4.25 \times 7}{11.33} = 0.073 \text{ k-ft}$$

$$f_b = \frac{0.073 \times 12}{2 \times 0.298} = 1.5 \text{ ksi}$$

SEE RISA OUTPUT FOR TOP CONN. REACTION.
PAGE 39-44

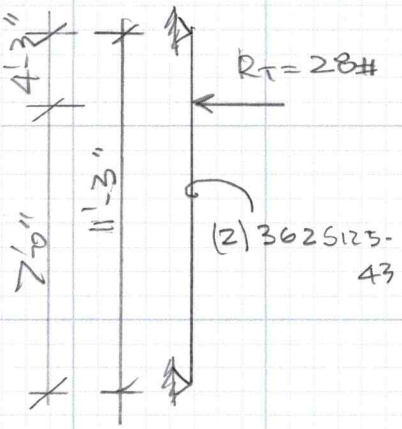

NBZ
Consulting Engineers
ph: 971.222.4378
fx: 503.848.8748

Project:	PSU-RNMC - 4TH FLOOR SPHR INTERIOR REMODEL		Sheet # 21
Location:	PORTLAND, OR		
Client:	PSU		Job # 26-011
Date:	09/2026	By: H.Z.	

B: ISLAND MOUNT SHELVES:

CONDITION (1):

LRFD w/ Ω = 2.0

SHEAR = 0

TENSION = 251 lbs

CONDITION (2): → SEE RISA OUTPUT PAGES 48 - 53

SHEAR = 276 lbs

TENSION = 0 lbs

SEE RISA OUTPUT P

USE LOZIER BASE BASE W/ (2) 3/8" ϕ

HILTI KBTZ2 W/ 1½" EMB, SEE PROFIS PAGES 54-64

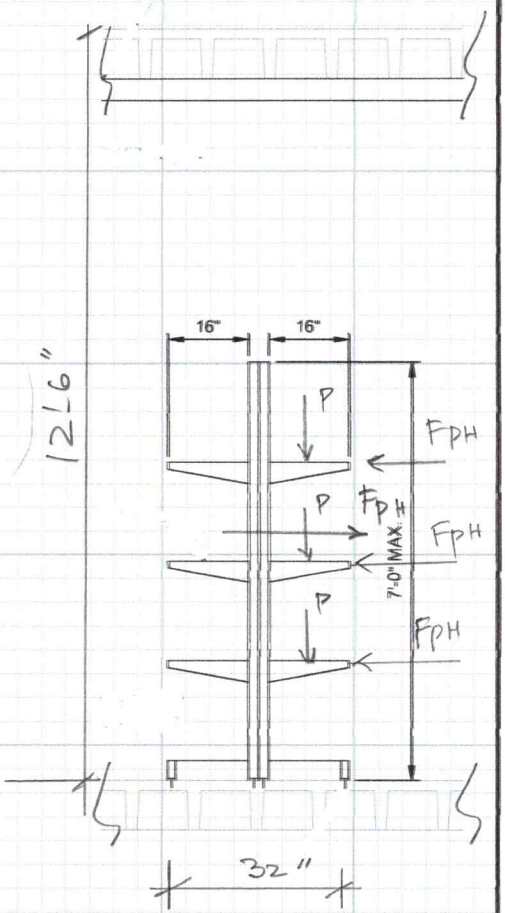

Hilti PROFIS Engineering 3.1.34

www.hilti.com

Company:		Page:	1
Address:		Specifier:	
Phone I Fax:	|	E-Mail:	
Design:	Concrete - Aug 31, 2026	Date:	9/2/2026
Fastening point:			

Specifier's comments:

1 Input data



Anchor type and diameter:	**Kwik Bolt TZ2 - CS 3/8 (1 1/2) hnom1**
Item number:	2210236 KB-TZ2 3/8x3
Specification text:	HILTI ∅ 3/8 IN KWIK BOLT TZ2 - CS WITH 1.875 IN NOMINAL EMBEDMENT DEPTH PER ICC-ES ESR-4266 , HAMMER DRILL BIT INSTALLATION PER MPII
Effective embedment depth:	$h_{ef,act}$ = 1.500 in., h_{nom} = 1.875 in.
Material:	Carbon Steel
Evaluation Service Report:	ESR-4266
Issued I Valid:	12/1/2025 | 12/1/2027
Proof:	Design Method ACI 318-19 / Mech
Shear edge breakout verification:	Row closest to edge (Case 3 only from ACI 318-19 Fig. R.17.7.2.1b)
Stand-off installation:	e_b = 0.000 in. (no stand-off); t = 0.500 in.
Anchor plate[R] :	l_x x l_y x t = 12.000 in. x 6.000 in. x 0.500 in.; (Recommended plate thickness: not calculated)
Profile:	no profile
Base material:	cracked concrete, 3000, f_c' = 3,000 psi; h = 3.250 in.
Installation:	**Hammer drilled hole, Installation condition: Dry**
Reinforcement:	tension: not present, shear: not present; no supplemental splitting reinforcement present edge reinforcement: none or < No. 4 bar
Seismic loads (cat. C, D, E, or F)	Tension load: yes (17.10.5.3 (d)) Shear load: yes (17.10.6.3 (c))

[R] - The anchor calculation is based on a rigid anchor plate assumption.

Input data and results must be checked for conformity with the existing conditions and for plausibility!
PROFIS Engineering (c) 2003-2026 Hilti AG, FL-9494 Schaan Hilti is a registered Trademark of Hilti AG, Schaan

Hilti PROFIS Engineering 3.1.34

www.hilti.com

Company:		Page:	2
Address:		Specifier:	
Phone I Fax:	|	E-Mail:	
Design:	Concrete - Aug 31, 2026	Date:	9/2/2026
Fastening point:			

Geometry [in.] & Loading [lb, in.lb]

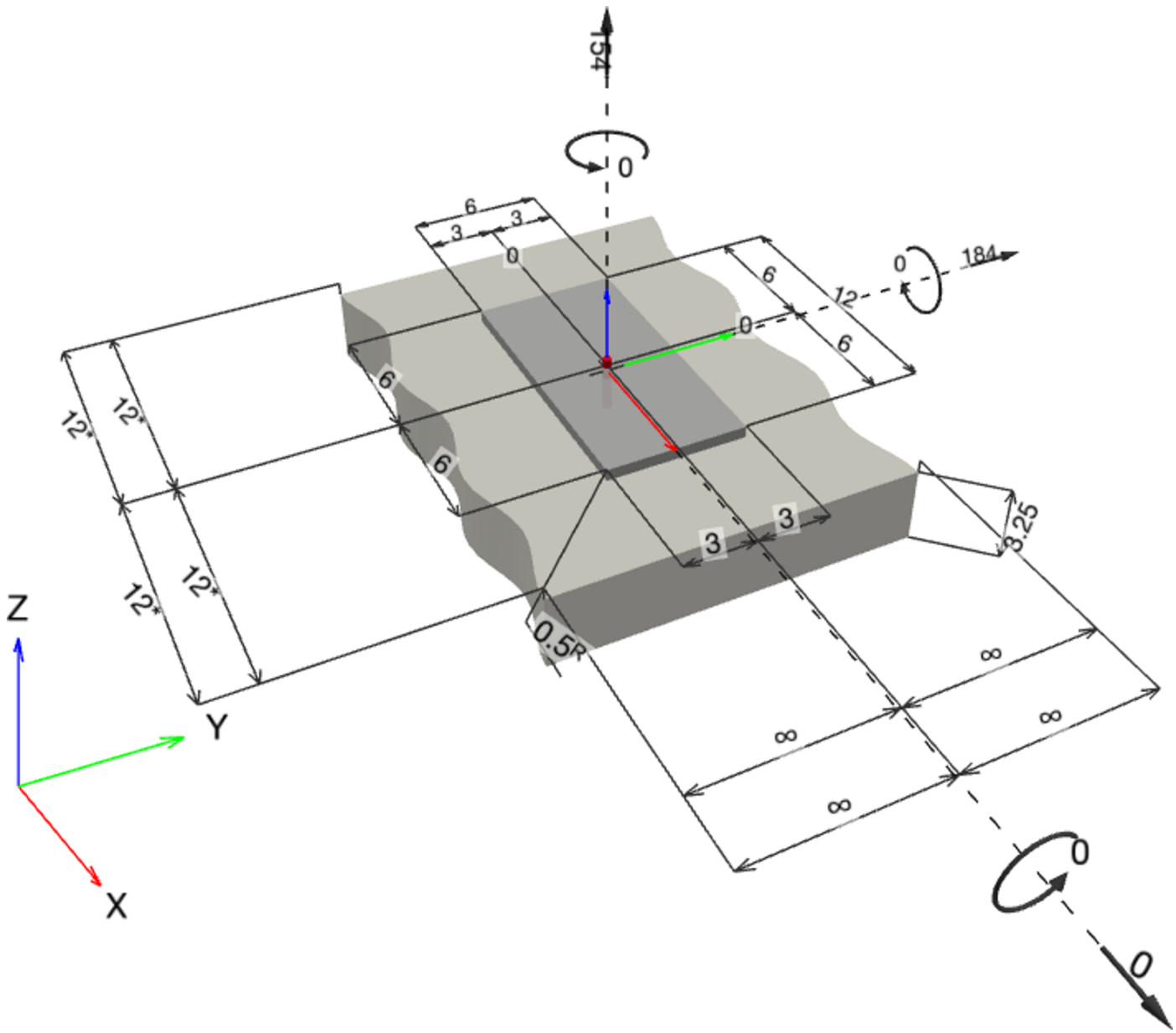

Input data and results must be checked for conformity with the existing conditions and for plausibility!
PROFIS Engineering (c) 2003-2026 Hilti AG, FL-9494 Schaan Hilti is a registered Trademark of Hilti AG, Schaan

Hilti PROFIS Engineering 3.1.34

www.hilti.com

Company:		Page:	3
Address:		Specifier:	
Phone I Fax:	|	E-Mail:	
Design:	Concrete - Aug 31, 2026	Date:	9/2/2026
Fastening point:			

1.1 Design results

Case	Description	Forces [lb] / Moments [in.lb]	Seismic	Max. Util. Anchor [%]
1	Combination 1	N = 154; V_x = 0; V_y = 184; M_x = 0; M_y = 0; M_z = 0;	yes	15

2 Load case/Resulting anchor forces

Anchor reactions [lb]

Tension force: (+Tension, -Compression)

Anchor	Tension force	Shear force	Shear force x	Shear force y
1	154	184	0	184

Max. concrete compressive strain: - [‰]
Max. concrete compressive stress: - [psi]
Resulting tension force in (x/y)=(0.000/0.000): 154 [lb]
Resulting compression force in (x/y)=(-/-): 0 [lb]

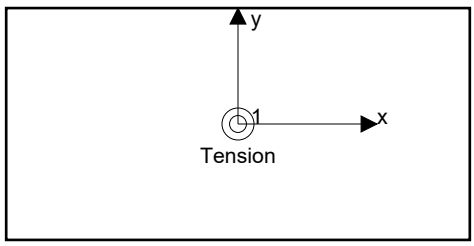

Anchor forces are calculated based on the assumption of a rigid anchor plate.

3 Tension load

	Load N_{ua} [lb]	Capacity ϕ N_n [lb]	Utilization $\beta_N = N_{ua}/\phi$ N_n	Status
Steel Strength*	154	4,869	4	OK
Pullout Strength*	N/A	N/A	N/A	N/A
Concrete Breakout Failure**	154	1,030	15	OK

* highest loaded anchor **anchor group (anchors in tension)

3.1 Steel Strength

N_{sa} [lb]	ϕ	ϕ N_{sa} [lb]	N_{ua} [lb]
6,493	0.750	4,869	154

3.2 Concrete Breakout Failure

A_{Nc} [in.^{2}]	A_{Nc0} [in.^{2}]	$c_{a,min}$ [in.]	c_{ac} [in.]	$\Psi_{c,N}$
20.25	20.25	12.000	5.000	1.000

$e_{c1,N}$ [in.]	$\Psi_{ec1,N}$	$e_{c2,N}$ [in.]	$\Psi_{ec2,N}$	$\Psi_{ed,N}$	$\Psi_{cp,N}$	k_{cr}
0.000	1.000	0.000	1.000	1.000	1.000	21

λ_a	N_b [lb]	ϕ	$\phi_{seismic}$	ϕ N_{cbg} [lb]	N_{ua} [lb]
1.000	2,113	0.650	0.750	1,030	154

Input data and results must be checked for conformity with the existing conditions and for plausibility!
PROFIS Engineering (c) 2003-2026 Hilti AG, FL-9494 Schaan Hilti is a registered Trademark of Hilti AG, Schaan

Company:		Page:	4
Address:		Specifier:	
Phone I Fax:	|	E-Mail:	
Design:	Concrete - Aug 31, 2026	Date:	9/2/2026
Fastening point:			

4 Shear load

	Load V_{ua} [lb]	Capacity ϕ V_n [lb]	Utilization $\beta_V = V_{ua}/\phi$ V_n	Status
Steel Strength*	184	2,097	9	OK
Steel failure (with lever arm)*	N/A	N/A	N/A	N/A
Pryout Strength**	184	1,479	13	OK
Concrete edge failure in direction x-**	184	7,661	3	OK

* highest loaded anchor **anchor group (relevant anchors)
When the input edge distance is set to "infinity", edge breakout verification is not performed in that direction

4.1 Steel Strength

V_{sa} [lb]	$\alpha_{V,seis}$	ϕ	ϕ V_{sa} [lb]	V_{ua} [lb]
3,226	1.000	0.650	2,097	184

4.2 Pryout Strength

A_{Nc} [in.^{2}]	A_{Nc0} [in.^{2}]	$c_{a,min}$ [in.]	k_{cp}	c_{ac} [in.]	$\Psi_{c,N}$
20.25	20.25	12.000	1	5.000	1.000
$e_{c1,V}$ [in.]	$\Psi_{ec1,V}$	$e_{c2,V}$ [in.]	$\Psi_{ec2,V}$	$\Psi_{ed,N}$	k_{cr}
0.000	1.000	0.000	1.000	1.000	21
λ_a	N_b [lb]	ϕ	$\phi_{seismic}$	ϕV_{cpg} [lb]	V_{ua} [lb]
1.000	2,113	0.700	1.000	1,479	184

4.3 Concrete edge failure in direction x-

l_e [in.]	d_a [in.]	c_{a1} [in.]	A_{Vc} [in.^{2}]	A_{Vc0} [in.^{2}]	
1.500	0.375	12.000	117.00	648.00	
$\Psi_{ed,V}$	$\Psi_{parallel,V}$	$e_{c,V}$ [in.]	$\Psi_{ec,V}$	$\Psi_{c,V}$	$\Psi_{h,V}$
1.000	2.000	0.000	1.000	1.000	2.353
λ_a	V_b [lb]	ϕ	$\phi_{seismic}$	ϕV_{cbg} [lb]	V_{ua} [lb]
1.000	12,878	0.700	1.000	7,661	184

When the input edge distance is set to "infinity", edge breakout verification is not performed in that direction

5 Combined tension and shear loads, per ACI 318-19 section 17.8

β_N	β_V	ζ	Utilization $\beta_{N,V}$ [%]	Status
0.149	0.124	5/3	8	OK

$\beta_{NV} = \beta_N^{\zeta} + \beta_V^{\zeta} <= 1$

Input data and results must be checked for conformity with the existing conditions and for plausibility!
PROFIS Engineering (c) 2003-2026 Hilti AG, FL-9494 Schaan Hilti is a registered Trademark of Hilti AG, Schaan

Company:		Page:	5
Address:		Specifier:	
Phone I Fax:	|	E-Mail:	
Design:	Concrete - Aug 31, 2026	Date:	9/2/2026
Fastening point:			

6 Warnings

- The anchor design methods in PROFIS Engineering require rigid anchor plates per current regulations (EN1992-4, AS5216, etc.). This means load re-distribution on the anchors due to elastic deformations of the anchor plate are not considered - the anchor plate is assumed to be sufficiently stiff, in order not to be deformed when subjected to the design loading. PROFIS Engineering calculates the minimum required anchor plate thickness with FEM to limit the stress of the anchor plate based on the assumptions explained above. The proof if the rigid anchor plate assumption is valid is not carried out by PROFIS Engineering. Input data and results must be checked for agreement with the existing conditions and for plausibility!
- The equations presented in this report are based on imperial units. When inputs are displayed in metric units, the user should be aware that the equations remain in their imperial format.
- Condition A applies where the potential concrete failure surfaces are crossed by supplementary reinforcement proportioned to tie the potential concrete failure prism into the structural member. Condition B applies where such supplementary reinforcement is not provided, or where pullout or pryout strength governs.
- Refer to the manufacturer's product literature for cleaning and installation instructions.
- For additional information about ACI 318 strength design provisions, please go to https://viewer.joomag.com/profis-design-guide-us-en-summer-2021/0841849001625154758?short&/
- "An anchor design approach for structures assigned to Seismic Design Category C, D, E or F is given in ACI 318-19, Chapter 17, Section 17.10.5.3 (a) that requires the governing design strength of an anchor or group of anchors be limited by ductile steel failure. If this is NOT the case, the connection design (tension) shall satisfy the provisions of Section 17.10.5.3 (b), Section 17.10.5.3 (c), or Section 17.10.5.3 (d). The connection design (shear) shall satisfy the provisions of Section 17.10.6.3 (a), Section 17.10.6.3 (b), or Section 17.10.6.3 (c)."
- Section 17.10.5.3 (b) / Section 17.10.6.3 (a) require the attachment the anchors are connecting to the structure be designed to undergo ductile yielding at a load level corresponding to anchor forces no greater than the controlling design strength. Section 17.10.5.3 (c) / Section 17.10.6.3 (b) waive the ductility requirements and require the anchors to be designed for the maximum tension / shear that can be transmitted to the anchors by a non-yielding attachment. Section 17.10.5.3 (d) / Section 17.10.6.3 (c) waive the ductility requirements and require the design strength of the anchors to equal or exceed the maximum tension / shear obtained from design load combinations that include E, with E increased by ω_0.
- Hilti post-installed anchors shall be installed in accordance with the Hilti Manufacturer's Printed Installation Instructions (MPII). Reference ACI 318-19, Section 26.7.

Fastening meets the design criteria!

PROFIS Engineering (c) 2003-2026 Hilti AG, FL-9494 Schaan Hilti is a registered Trademark of Hilti AG, Schaan

Company:		Page:	6
Address:		Specifier:	
Phone I Fax:	|	E-Mail:	
Design:	Concrete - Aug 31, 2026	Date:	9/2/2026
Fastening point:			

7 Installation data

Anchor type and diameter: Kwik Bolt TZ2 - CS 3/8 (1 1/2) hnom1

Profile: no profile

Item number: 2210236 KB-TZ2 3/8x3

Hole diameter in the fixture: d_f = 0.438 in.

Maximum installation torque: 361 in.lb

Plate thickness (input): 0.500 in.

Hole diameter in the base material: 0.375 in.

Recommended plate thickness: not calculated

Hole depth in the base material: 2.000 in.

Drilling method: Hammer drilled

Minimum thickness of the base material: 3.250 in.

Cleaning: Manual cleaning of the drilled hole according to instructions for use is required.

Hilti ∅ 3/8 in Kwik Bolt TZ2 - CS with 1.875 in nominal embedment depth per ICC-ES ESR-4266 , Hammer drill bit installation per MPII

7.1 Recommended accessories

Drilling	Cleaning	Setting
• Suitable Rotary Hammer • Properly sized drill bit	• Manual blow-out pump	• Torque controlled cordless impact tool • Torque wrench • Hammer

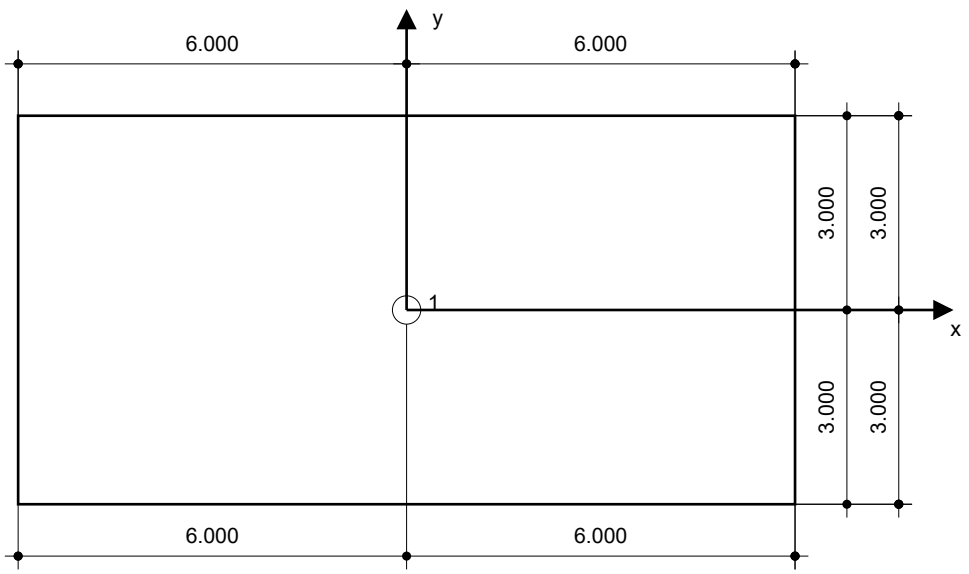

Coordinates Anchor [in.]

Anchor	x	y	c_{-x}	c_{+x}	c_{-y}	c_{+y}
1	0.000	0.000	12.000	12.000	-	-

Input data and results must be checked for conformity with the existing conditions and for plausibility!
PROFIS Engineering (c) 2003-2026 Hilti AG, FL-9494 Schaan Hilti is a registered Trademark of Hilti AG, Schaan



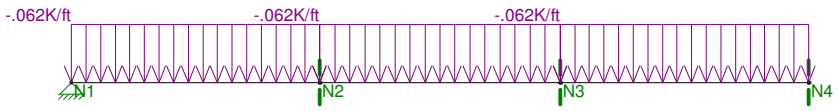

Loads: BLC 1, DEAD LOAD
Solution: LC 2, 1.2DL+1.6LL

NBZ	RMNC 4th Floor	September 2, 2026
HZ		
26-011		



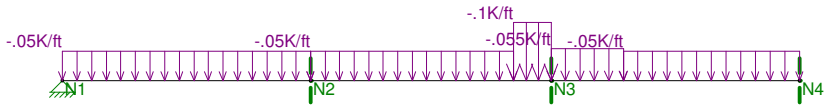

Loads: BLC 2, LIVE LOAD
Solution: LC 2, 1.2DL+1.6LL

NBZ	RMNC 4th Floor	September 2, 2026
HZ		
26-011		

Global

Steel Code	AISC 9th Edition ASD
Allowable Stress Increase Factor (ASIF)	1.333
Include Shear Deformation	Yes
Include Warping	Yes
No. of Sections for Member Calcs	10
Redesign Sections	Yes
P-Delta Analysis Tolerance	0.50%
Vertical Axis	Y

Joint Coordinates

Joint Label	X Coordinate (Ft)	Y Coordinate (Ft)	Z Coordinate (Ft)	Joint Temperature (F)
N1	0	0	0	0
N2	31	0	0	0
N3	61	0	0	0
N4	92	0	0	0

Boundary Conditions

Joint Label	X Translation (K/in)	Y Translation (K/in)	Z Translation (K/in)	MX Rotation (K-ft/rad)	MY Rotation (K-ft/rad)	MZ Rotation (K-ft/rad)
N1	Reaction	Reaction	Reaction			
N2		Reaction	Reaction			
N3		Reaction	Reaction			
N4		Reaction	Reaction			

Member Data

Member Label	I Node	J Node	K Node	X-Axis Rotate (degrees)	Section Set	End Releases I-End xyz xyz	End Releases J-End xyz xyz	End Offsets I-End (In)	End Offsets J-End (In)	Inactive Code	Member Length (Ft)
M1	N1	N2			SEC1						31
M2	N2	N3			SEC1						30
M3	N3	N4			SEC1						31

Basic Load Case Data

BLC No.	Basic Load Case Description	Category Code	Category Description	Load Type Totals Nodal	Point	Distributed	Surface
1	DEAD LOAD	DL	Dead Load			3	
2	LIVE LOAD	LL	Live Load			5	

Member Distributed Loads, Category : DL, BLC 1 : DEAD LOAD

Member Label	I Joint	J Joint	Load Pattern Label	Pattern Multiplier
M1	N1	N2	UNIFORM	1
M2	N2	N3	UNIFORM	1
M3	N3	N4	UNIFORM	1

Company : **NBZ** September 2, 2026
Designer : **HZ**
Job Number : **26-011** **RMNC 4th Floor** Checked By:_____

Member Distributed Loads, Category : LL, BLC 2 : LIVE LOAD

Member Label	I Joint	J Joint	Load Pattern Label	Pattern Multiplier
M1	N1	N2	UNILL1	1
M2	N2	N3	UNILL1-1	1
M3	N3	N4	UNILL1-2	1
M2	N2	N3	UNILL2	1
M3	N3	N4	UNILL3	1

Distributed Load Patterns

Pattern Label	Direction	Start Magnitude (K/ft, F)	End Magnitude (K/ft, F)	Start Location (Ft or %)	End Location (Ft or %)
UNIFORM	Y	-.062	-.062	0	100
UNILL1	Y	-.05	-.05	0	100
UNILL1-1	Y	-.05	-.05	0	25.33
UNILL1-2	Y	-.05	-.05	9	31
UNILL2	Y	-.1	-.1	25.33	30
UNILL3	Y	-.055	-.055	0	9

Load Combinations

Num	Description	Env	WS	PD	SRSS	CD	BLC	Factor	BLC	Factor	BLC	Factor	BLC	Factor
1	1.4DL					0	1	1.4						
2	1.2DL+1.6LL	y				1	1	1.2	2	1.6				
3	DEAD LOAD					1	1	1						

Reactions, LC 2 : 1.2DL+1.6LL

Joint Label	X Force (K)	Y Force (K)	Z Force (K)	X Moment (K-ft)	Y Moment (K-ft)	Z Moment (K-ft)
N1	0.000	1.932	0.000	0.000	0.000	0.000
N2	0.000	5.215	0.000	0.000	0.000	0.000
N3	0.000	5.628	0.000	0.000	0.000	0.000
N4	0.000	1.931	0.000	0.000	0.000	0.000
Reaction Totals :	0.000	14.706	0.000			
Center of Gravity Coords (X,Y,Z) (Ft) :				46.417	0.000	0.000

Member Section Forces, LC 2 : 1.2DL+1.6LL

Member Label	Section	Axial (K)	Shear y-y (K)	Shear z-z (K)	Torque (K-ft)	Moment y-y (K-ft)	Moment z-z (K-ft)
M1	1	0	1.932	0	0	0	0
	2	0	1.398	0	0	0	-5.736
	3	0	0.865	0	0	0	-9.634
	4	0	0.331	0	0	0	-11.692
	5	0	-0.203	0	0	0	-11.911
	6	0	-0.737	0	0	0	-10.292
	7	0	-1.271	0	0	0	-6.833
	8	0	-1.805	0	0	0	-1.536

Member Section Forces, LC 2 : 1.2DL+1.6LL, (continued)

Member Label	Section	Axial (K)	Shear y-y (K)	Shear z-z (K)	Torque (K-ft)	Moment y-y (K-ft)	Moment z-z (K-ft)
	9	0	-2.339	0	0	0	5.601
	10	0	-2.873	0	0	0	14.576
M2	1	0	2.342	0	0	0	14.576
	2	0	1.825	0	0	0	7.631
	3	0	1.309	0	0	0	2.407
	4	0	0.792	0	0	0	-1.094
	5	0	0.275	0	0	0	-2.873
	6	0	-0.241	0	0	0	-2.929
	7	0	-0.758	0	0	0	-1.264
	8	0	-1.275	0	0	0	2.124
	9	0	-1.898	0	0	0	7.305
	10	0	-2.682	0	0	0	14.938
M3	1	0	2.946	0	0	0	14.938
	2	0	2.384	0	0	0	5.758
	3	0	1.823	0	0	0	-1.488
	4	0	1.272	0	0	0	-6.808
	5	0	0.738	0	0	0	-10.27
	6	0	0.204	0	0	0	-11.894
	7	0	-0.329	0	0	0	-11.679
	8	0	-0.863	0	0	0	-9.625
	9	0	-1.397	0	0	0	-5.732
	10	0	-1.931	0	0	0	0

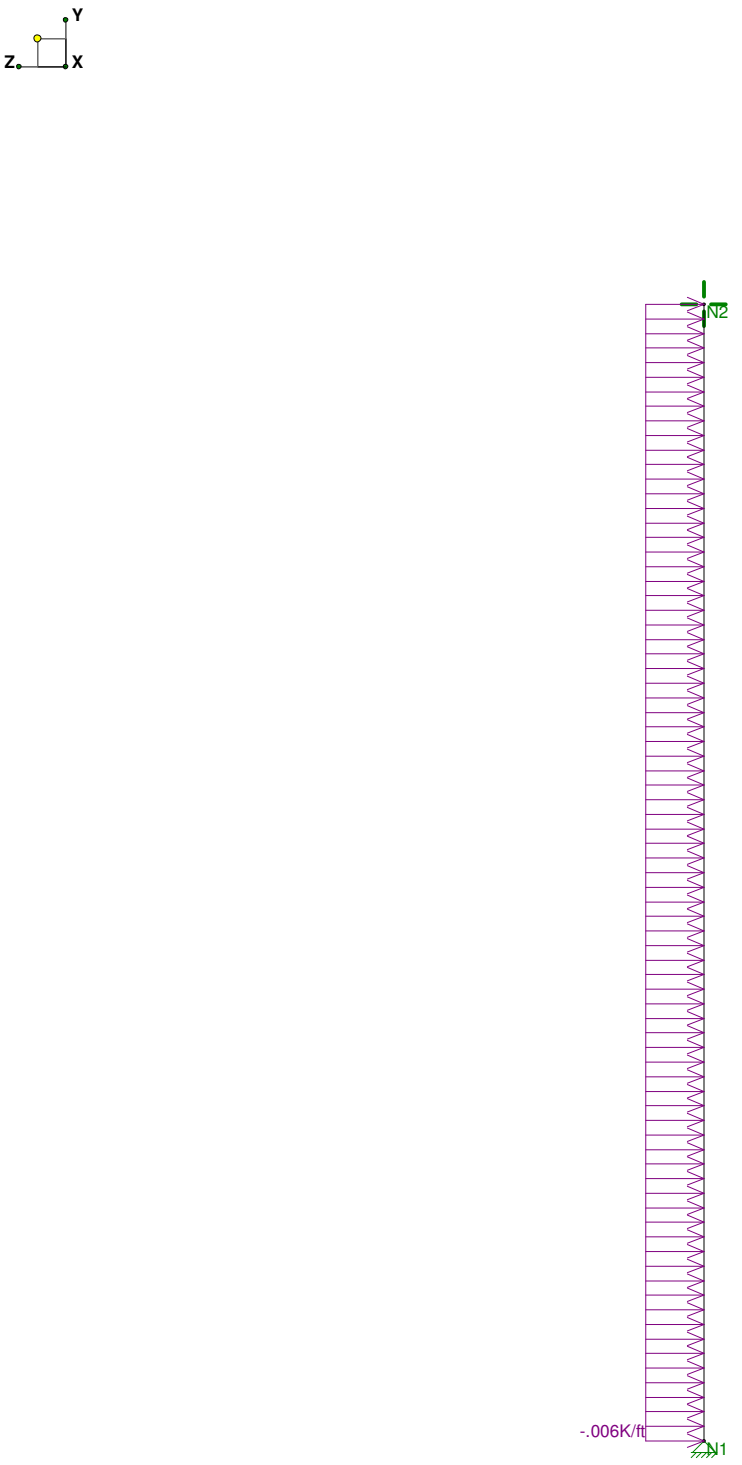

Loads: BLC 1, Wind Load

NBZ Engineers	RMNC Monitor Studs	September 2, 2026
HZ		RNMC Studs at Monitor.r3d
26-011		





Loads: BLC 2, DL

NBZ Engineers	RMNC Monitor Studs	September 2, 2026
HZ		RNMC Studs at Monitor.r3d
26-011		



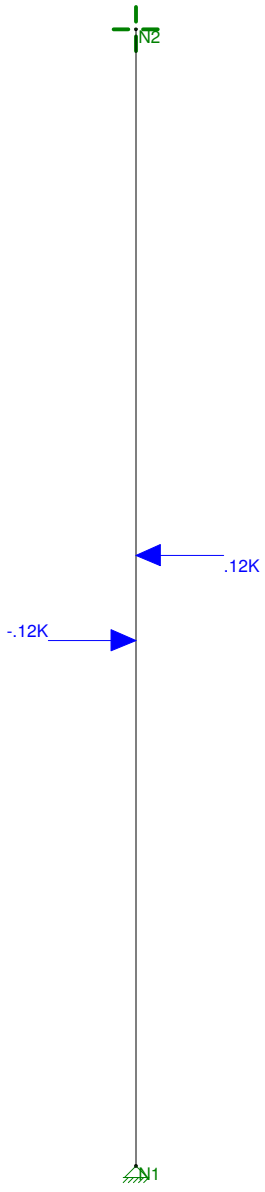

Loads: BLC 3, Fp

NBZ Engineers	RMNC Monitor Studs	September 2, 2026
HZ		RNMC Studs at Monitor.r3d
26-011		

Global

Steel Code	AISC 9th Edition ASD
Allowable Stress Increase Factor (ASIF)	1.333
Include Shear Deformation	Yes
Include Warping	Yes
No. of Sections for Member Calcs	10
Redesign Sections	Yes
P-Delta Analysis Tolerance	0.50%
Vertical Axis	Y

Joint Coordinates

Joint Label	X Coordinate (Ft)	Y Coordinate (Ft)	Z Coordinate (Ft)	Joint Temperature (F)
N1	0	0	0	0
N2	0	11.25	0	0

Boundary Conditions

Joint Label	X Translation (K/in)	Y Translation (K/in)	Z Translation (K/in)	MX Rotation (K-ft/rad)	MY Rotation (K-ft/rad)	MZ Rotation (K-ft/rad)
N1	Reaction	Reaction	Reaction			
N2		Reaction	Reaction			

Member Data

Member Label	I Node	J Node	K Node	X-Axis Rotate (degrees)	Section Set	End Releases I-End xyz xyz	End Releases J-End xyz xyz	End Offsets I-End (In)	End Offsets J-End (In)	Inactive Code	Member Length (Ft)
M1	N1	N2		90	SEC1						11.25

Basic Load Case Data

BLC No.	Basic Load Case Description	Category Code	Category Description	Load Type Totals Nodal	Point	Distributed	Surface
1	Wind Load	WL	Wind Load			1	
2	DL	DL	Dead Load		2		
3	Fp	EL	Earthquake Load		2		

Member Distributed Loads, Category : WL, BLC 1 : Wind Load

Member Label	I Joint	J Joint	Load Pattern Label	Pattern Multiplier
M1	N1	N2	UNIFORM	.006

Distributed Load Patterns

Pattern Label	Direction	Start Magnitude (K/ft, F)	End Magnitude (K/ft, F)	Start Location (Ft or %)	End Location (Ft or %)
UNIFORM	Z	-1	-1	0	0

Member Point Loads, Category : DL, BLC 2 : DL

Member Label	I Joint	J Joint	Direction	Magnitude (K, K-ft)	Location (Ft or %)
M1	N1	N2	Y	-.056	5.2
M1	N1	N2	Y	-.056	6.2

Member Point Loads, Category : EL, BLC 3 : Fp

Member Label	I Joint	J Joint	Direction	Magnitude (K, K-ft)	Location (Ft or %)
M1	N1	N2	Z	-.12	5.2
M1	N1	N2	Z	.12	6.04

Load Combinations

Num	Description	Env	WS	PD	SRSS	CD	BLC	Factor	BLC	Factor	BLC	Factor	BLC	Factor
1	WL+DL	y				1	1	1	2	1				
2	DL+Fp	y				1	2	1	3	1				

Envelope Reactions

Joint Label		X Force (K)	Lc	Y Force (K)	Lc	Z Force (K)	Lc	X Moment (K-ft)	Lc	Y Moment (K-ft)	Lc	Z Moment (K-ft)	Lc
N1	max	0.000	1	0.055	1	0.034	1	0.000	1	0.000	1	0.000	1
	min	0.000	1	0.055	1	0.009	2	0.000	1	0.000	1	0.000	1
N2	max	0.000	1	0.057	1	0.034	1	0.000	1	0.000	1	0.000	1
	min	0.000	1	0.057	1	-0.009	2	0.000	1	0.000	1	0.000	1
Reaction Totals :	max	0.000	1	0.112	1	0.068	1						
	min	0.000	1	0.112	1	0.000	2						

Envelope Member Section Forces

Member Label	Section		Axial (K)	Lc	Shear y-y (K)	Lc	Shear z-z (K)	Lc	Torque (K-ft)	Lc	Moment y-y (K-ft)	Lc	Moment z-z (K-ft)	Lc
M1	1	max	0.055	1	0.034	1	0	1	0	1	0	1	0	1
		min	0.055	1	0.009	2	0	1	0	1	0	1	0	1
	2	max	0.055	1	0.026	1	0	1	0	1	0	1	-0.011	2
		min	0.055	1	0.009	2	0	1	0	1	0	1	-0.038	1
	3	max	0.055	1	0.019	1	0	1	0	1	0	1	-0.022	2
		min	0.055	1	0.009	2	0	1	0	1	0	1	-0.066	1
	4	max	0.055	1	0.011	1	0	1	0	1	0	1	-0.034	2
		min	0.055	1	0.009	2	0	1	0	1	0	1	-0.084	1
	5	max	0.055	1	0.009	2	0	1	0	1	0	1	-0.045	2
		min	0.055	1	0.004	1	0	1	0	1	0	1	-0.094	1
	6	max	-0.057	1	0.009	2	0	1	0	1	0	1	0.045	2
		min	-0.057	1	-0.004	1	0	1	0	1	0	1	-0.094	1
	7	max	-0.057	1	0.009	2	0	1	0	1	0	1	0.034	2
		min	-0.057	1	-0.011	1	0	1	0	1	0	1	-0.084	1
	8	max	-0.057	1	0.009	2	0	1	0	1	0	1	0.022	2
		min	-0.057	1	-0.019	1	0	1	0	1	0	1	-0.066	1
	9	max	-0.057	1	0.009	2	0	1	0	1	0	1	0.011	2

Envelope Member Section Forces, (continued)

Member Label	Section		Axial (K)	Lc	Shear y-y (K)	Lc	Shear z-z (K)	Lc	Torque (K-ft)	Lc	Moment y-y (K-ft)	Lc	Moment z-z (K-ft)	Lc
		min	-0.057	1	-0.026	1	0	1	0	1	0	1	-0.038	1
	10	max	-0.057	1	0.009	2	0	1	0	1	0	1	0	1
		min	-0.057	1	-0.034	1	0	1	0	1	0	1	0	1

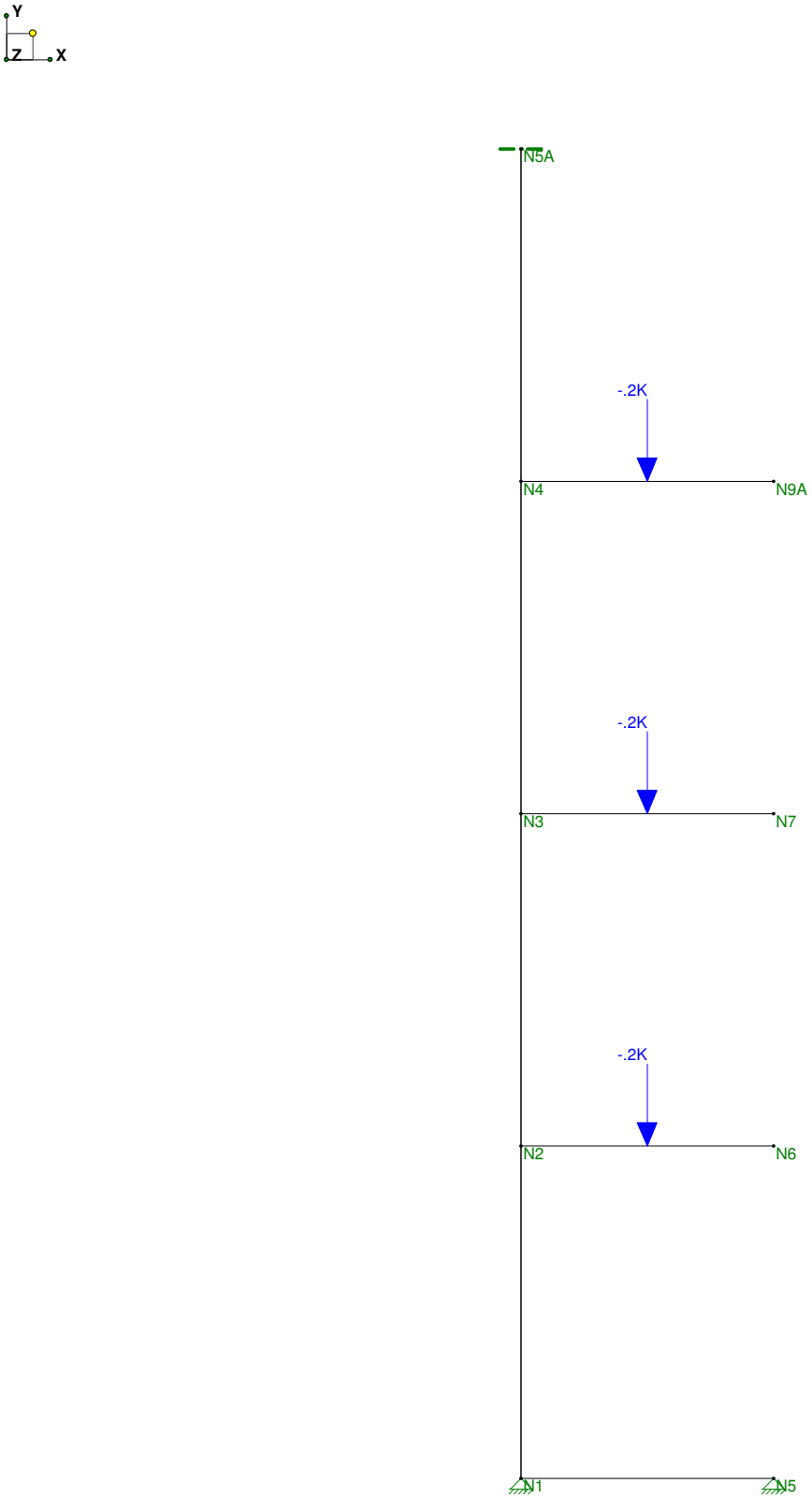

Loads: BLC 1, DL

NBZ Engineers	Toy Single Shelves	September 1, 2026
HZ		Toy Single Shelf- 3 shelves.r3d
26-011		

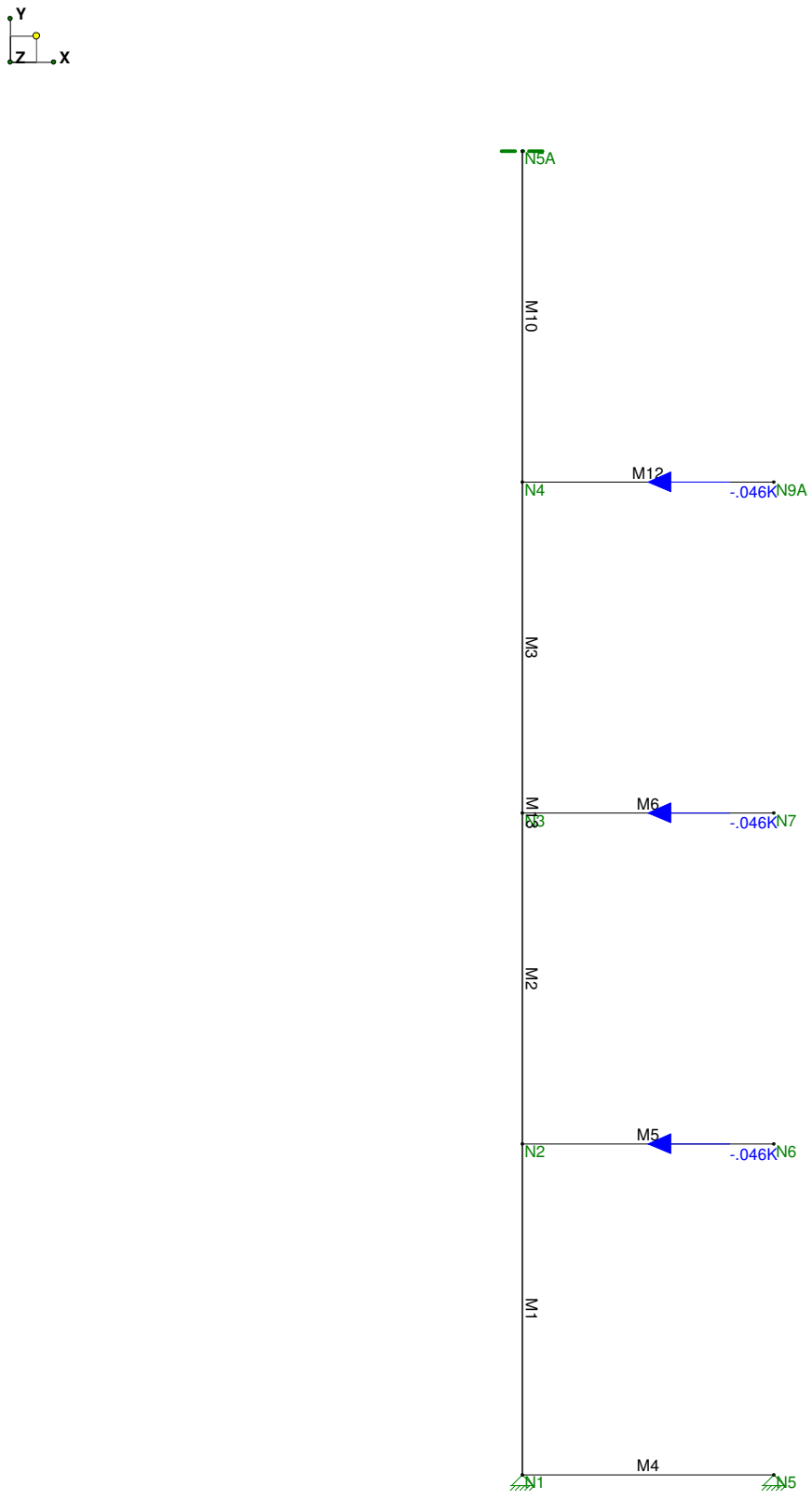

Loads: BLC 2, Fph

NBZ Engineers	Toy Single Shelves	September 1, 2026
HZ		Toy Single Shelf- 3 shelves.r3d
26-011		

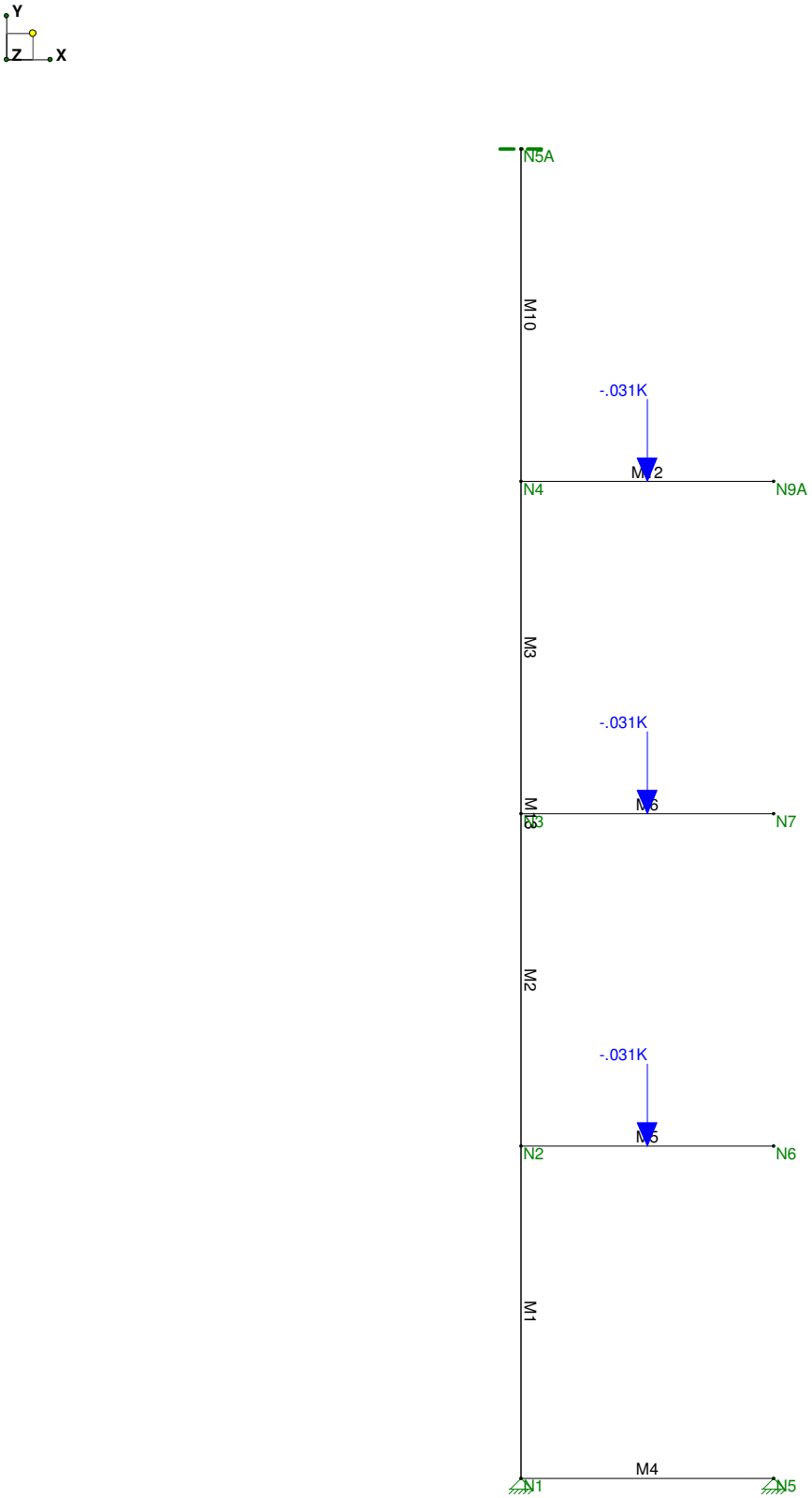

Loads: BLC 3, Fpv

NBZ Engineers	Toy Single Shelves	September 1, 2026
HZ		Toy Single Shelf- 3 shelves.r3d
26-011		

Global

Steel Code	AISC 9th Edition ASD
Allowable Stress Increase Factor (ASIF)	1.333
Include Shear Deformation	Yes
Include Warping	Yes
No. of Sections for Member Calcs	5
Redesign Sections	Yes
P-Delta Analysis Tolerance	0.50%
Vertical Axis	Y

Joint Coordinates

Joint Label	X Coordinate (Ft)	Y Coordinate (Ft)	Z Coordinate (Ft)	Joint Temperature (F)
N1	0	0	0	0
N2	0	1.75	0	0
N3	0	3.5	0	0
N4	0	5.25	0	0
N5A	0	7	0	0
N5	1.33	0	0	0
N6	1.33	1.75	0	0
N7	1.33	3.5	0	0
N9A	1.33	5.25	0	0

Boundary Conditions

Joint Label	X Translation (K/in)	Y Translation (K/in)	Z Translation (K/in)	MX Rotation (K-ft/rad)	MY Rotation (K-ft/rad)	MZ Rotation (K-ft/rad)
N1	Reaction	Reaction	Reaction			
N5	Reaction	Reaction	Reaction			
N5A	Reaction		Reaction			

Member Data

Member Label	I Node	J Node	K Node	X-Axis Rotate (degrees)	Section Set	End Releases I-End xyz xyz	End Releases J-End xyz xyz	End Offsets I-End (In)	End Offsets J-End (In)	Inactive Code	Member Length (Ft)
M1	N1	N2			SEC1						1.75
M2	N2	N3			SEC1						1.75
M3	N3	N4			SEC1						1.75
M4	N1	N5			SEC1						1.33
M5	N2	N6			SEC1						1.33
M6	N3	N7			SEC1						1.33
M10	N4	N5A			SEC1						1.75
M12	N4	N9A			SEC1						1.33
M13	N5A	N1			SEC1						7

Basic Load Case Data

BLC No.	Basic Load Case Description	Category Code	Category Description	Load Type Totals Nodal	Point	Distributed	Surface
1	DL	DL	Dead Load		3		
2	Fph	EL	Earthquake Load		3		

Basic Load Case Data (continued)

BLC No.	Basic Load Case	Category Description	Category Code	Description	Load Type Totals Nodal	Point	Distributed	Surface
3	Fpv	EL	Earthquake Load		3			

Distributed Load Patterns

Pattern Label	Direction	Start Magnitude (K/ft, F)	End Magnitude (K/ft, F)	Start Location (Ft or %)	End Location (Ft or %)
UNIFORM	Y	-1	-1	0	0

Member Point Loads, Category : DL, BLC 1 : DL

Member Label	I Joint	J Joint	Direction	Magnitude (K, K-ft)	Location (Ft or %)
M5	N2	N6	Y	-.2	.665
M6	N3	N7	Y	-.2	.665
M12	N4	N9A	Y	-.2	.665

Member Point Loads, Category : EL, BLC 2 : Fph

Member Label	I Joint	J Joint	Direction	Magnitude (K, K-ft)	Location (Ft or %)
M5	N2	N6	X	-.046	.665
M6	N3	N7	X	-.046	.665
M12	N4	N9A	X	-.046	.665

Member Point Loads, Category : EL, BLC 3 : Fpv

Member Label	I Joint	J Joint	Direction	Magnitude (K, K-ft)	Location (Ft or %)
M5	N2	N6	Y	-.031	.665
M6	N3	N7	Y	-.031	.665
M12	N4	N9A	Y	-.031	.665

Load Combinations

Num	Description	Env	WS	PD	SRSS	CD	BLC	Factor	BLC	Factor	BLC	Factor	BLC	Factor
1	DL+.7Fph+.7Fpv	y				1	1	1	2	.7	3	.7		
2	.6DL+.7Fph-.7Fpv	y				1	1	.6	2	.7	3	-.7		
3	1.2DL+2Fph+Fpv					1	1	1.2	2	2	3	1		
4	.9DL+2Fph-Fpv					1	1	.9	2	2	3	-1		

Envelope Reactions

Joint Label		X Force (K)	Lc	Y Force (K)	Lc	Z Force (K)	Lc	X Moment (K-ft)	Lc	Y Moment (K-ft)	Lc	Z Moment (K-ft)	Lc
N1	max	0.125	1	0.737	1	0.000	1	0.000	1	0.000	1	0.000	1

Company : **NBZ Engineers** September 1, 2026
Designer : **HZ**
Job Number : **26-011** **Toy Single Shelves** Checked By:_____

Envelope Reactions, (continued)

Joint Label		X Force (K)	Lc	Y Force (K)	Lc	Z Force (K)	Lc	X Moment (K-ft)	Lc	Y Moment (K-ft)	Lc	Z Moment (K-ft)	Lc
	min	0.088	2	0.358	2	0.000	1	0.000	1	0.000	1	0.000	1
N5	max	0.000	1	-0.063	2	0.000	1	0.000	1	0.000	1	0.000	1
	min	0.000	2	-0.072	1	0.000	1	0.000	1	0.000	1	0.000	1
N5A	max	0.008	2	0.000	1	0.000	1	0.000	1	0.000	1	0.000	1
	min	-0.028	1	0.000	1	0.000	1	0.000	1	0.000	1	0.000	1
Reaction Totals :	max	0.097	2	0.665	1	0.000	1						
	min	0.097	1	0.295	2	0.000	1						

Global

Steel Code	AISC 9th Edition ASD
Allowable Stress Increase Factor (ASIF)	1.333
Include Shear Deformation	Yes
Include Warping	Yes
No. of Sections for Member Calcs	5
Redesign Sections	Yes
P-Delta Analysis Tolerance	0.50%
Vertical Axis	Y

Joint Coordinates

Joint Label	X Coordinate (Ft)	Y Coordinate (Ft)	Z Coordinate (Ft)	Joint Temperature (F)
N1	0	0	0	0
N2	0	1.75	0	0
N3	0	3.5	0	0
N4	0	5.25	0	0
N5A	0	7	0	0
N5	1.33	0	0	0
N6	1.33	1.75	0	0
N7	1.33	3.5	0	0
N9A	1.33	5.25	0	0

Boundary Conditions

Joint Label	X Translation (K/in)	Y Translation (K/in)	Z Translation (K/in)	MX Rotation (K-ft/rad)	MY Rotation (K-ft/rad)	MZ Rotation (K-ft/rad)
N1	Reaction	Reaction	Reaction			
N5	Reaction	Reaction	Reaction			
N5A	Reaction		Reaction			

Member Data

Member Label	I Node	J Node	K Node	X-Axis Rotate (degrees)	Section Set	End Releases I-End xyz xyz	End Releases J-End xyz xyz	End Offsets I-End (In)	End Offsets J-End (In)	Inactive Code	Member Length (Ft)
M1	N1	N2			SEC1						1.75
M2	N2	N3			SEC1						1.75
M3	N3	N4			SEC1						1.75
M4	N1	N5			SEC1						1.33
M5	N2	N6			SEC1						1.33
M6	N3	N7			SEC1						1.33
M10	N4	N5A			SEC1						1.75
M12	N4	N9A			SEC1						1.33
M13	N5A	N1			SEC1						7

Basic Load Case Data

BLC No.	Basic Load Case Description	Category Code	Category Description	Load Type Totals Nodal	Point	Distributed	Surface
1	DL	DL	Dead Load		3		
2	Fph	EL	Earthquake Load		3		

Basic Load Case Data (continued)

BLC No.	Basic Load Case	Category Description	Category Code	Load Type Totals Description	Nodal	Point	Distributed	Surface
3	Fpv	EL	Earthquake Load		3			

Distributed Load Patterns

Pattern Label	Direction	Start Magnitude (K/ft, F)	End Magnitude (K/ft, F)	Start Location (Ft or %)	End Location (Ft or %)
UNIFORM	Y	-1	-1	0	0

Member Point Loads, Category : DL, BLC 1 : DL

Member Label	I Joint	J Joint	Direction	Magnitude (K, K-ft)	Location (Ft or %)
M5	N2	N6	Y	-.2	.665
M6	N3	N7	Y	-.2	.665
M12	N4	N9A	Y	-.2	.665

Member Point Loads, Category : EL, BLC 2 : Fph

Member Label	I Joint	J Joint	Direction	Magnitude (K, K-ft)	Location (Ft or %)
M5	N2	N6	X	-.046	.665
M6	N3	N7	X	-.046	.665
M12	N4	N9A	X	-.046	.665

Member Point Loads, Category : EL, BLC 3 : Fpv

Member Label	I Joint	J Joint	Direction	Magnitude (K, K-ft)	Location (Ft or %)
M5	N2	N6	Y	-.031	.665
M6	N3	N7	Y	-.031	.665
M12	N4	N9A	Y	-.031	.665

Load Combinations

Num	Description	Env	WS	PD	SRSS	CD	BLC	Factor	BLC	Factor	BLC	Factor	BLC	Factor
1	DL+.7Fph+.7Fpv					1	1	1	2	.7	3	.7		
2	.6DL+.7Fph-.7Fpv					1	1	.6	2	.7	3	-.7		
3	1.2DL+2Fph+Fpv	y				1	1	1.2	2	2	3	1		
4	.9DL+2Fph-Fpv	y				1	1	.9	2	2	3	-1		

Envelope Reactions

Joint Label		X Force (K)	Lc	Y Force (K)	Lc	Z Force (K)	Lc	X Moment (K-ft)	Lc	Y Moment (K-ft)	Lc	Z Moment (K-ft)	Lc
N1	max	0.25	3	0.993	3	0.000	3	0.000	3	0.000	3	0.000	3

Company : **NBZ Engineers** September 1, 2026
Designer : **HZ**
Job Number : **26-011** **Toy Single Shelves** Checked By:_____

Envelope Reactions, (continued)

Joint Label		X Force (K)	Lc	Y Force (K)	Lc	Z Force (K)	Lc	X Moment (K-ft)	Lc	Y Moment (K-ft)	Lc	Z Moment (K-ft)	Lc
	min	0.213	4	0.619	4	0.000	3	0.000	3	0.000	3	0.000	3
N5	max	0.000	3	-0.172	4	0.000	3	0.000	3	0.000	3	0.000	3
	min	0.000	4	-0.18	3	0.000	3	0.000	3	0.000	3	0.000	3
N5A	max	0.063	4	0.000	3	0.000	3	0.000	3	0.000	3	0.000	3
	min	0.026	3	0.000	3	0.000	3	0.000	3	0.000	3	0.000	3
Reaction Totals :	max	0.276	4	0.813	3	0.000	3						
	min	0.276	3	0.447	4	0.000	3						

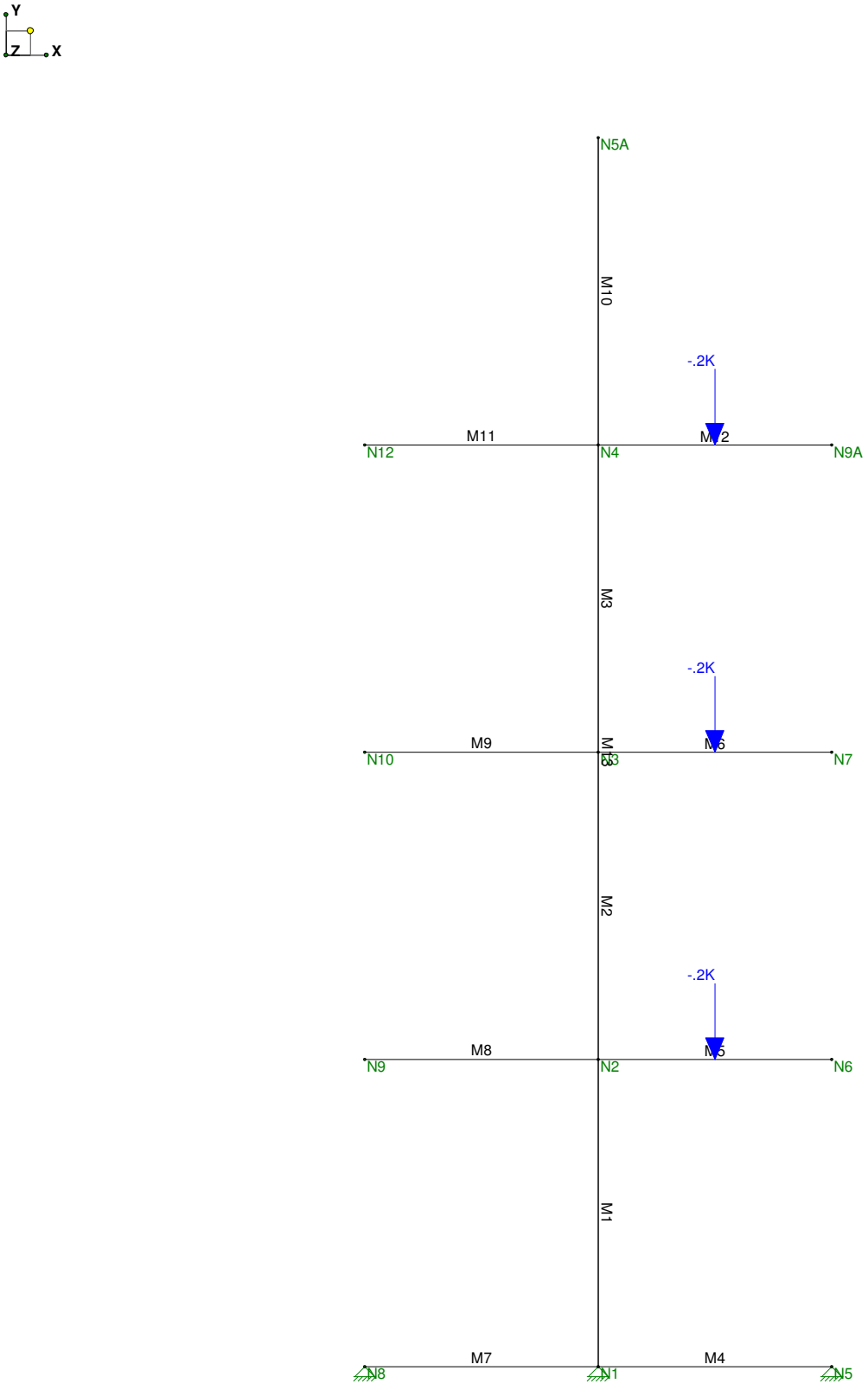

Loads: BLC 1, DL

NBZ Engineers	Toy Double Shelves	September 1, 2026
HZ		Toy Double Shelf- 3 shelves.r3d
26-011		

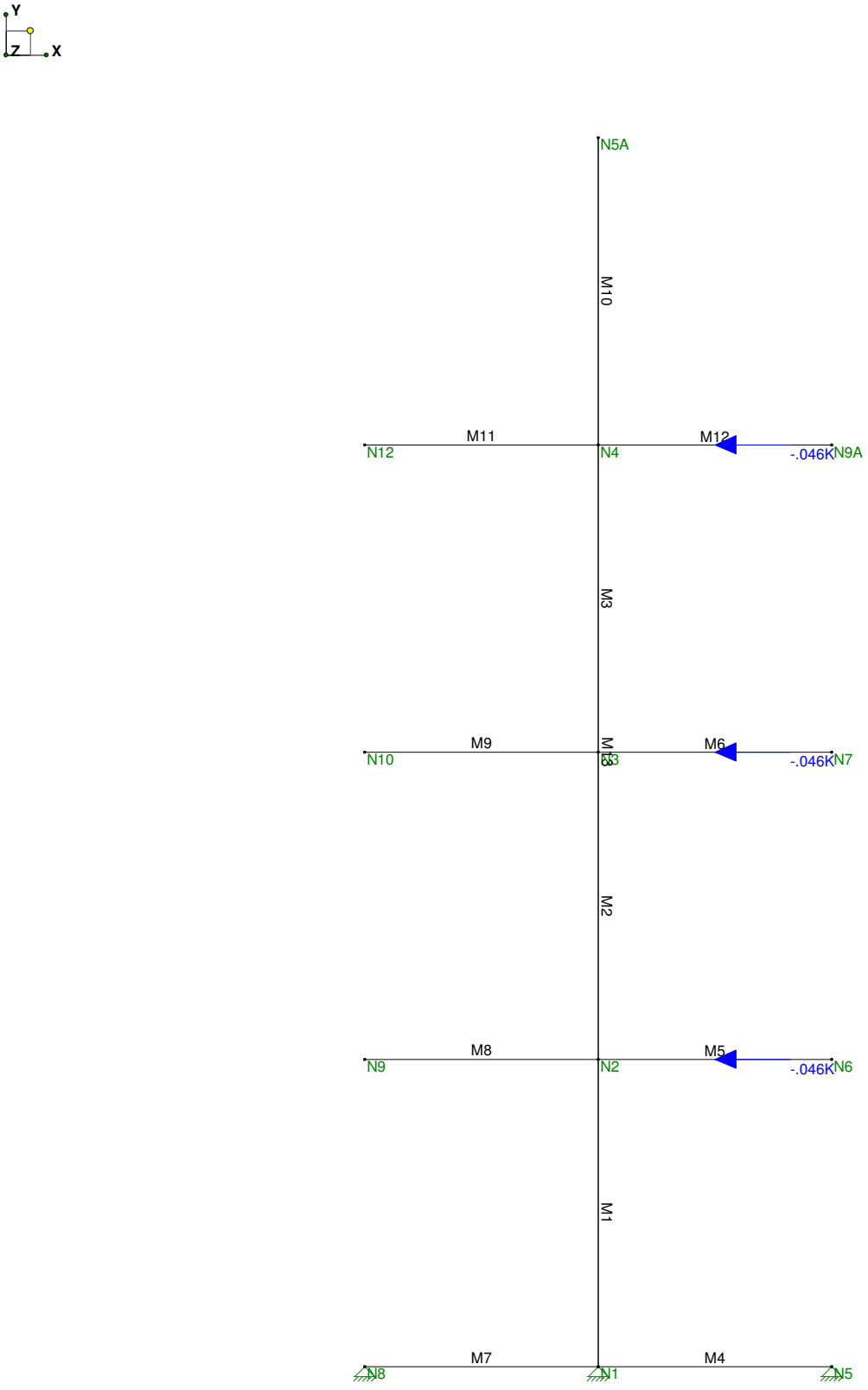

Loads: BLC 2, Fph

NBZ Engineers	Toy Double Shelves	September 1, 2026
HZ		Toy Double Shelf- 3 shelves.r3d
26-011		

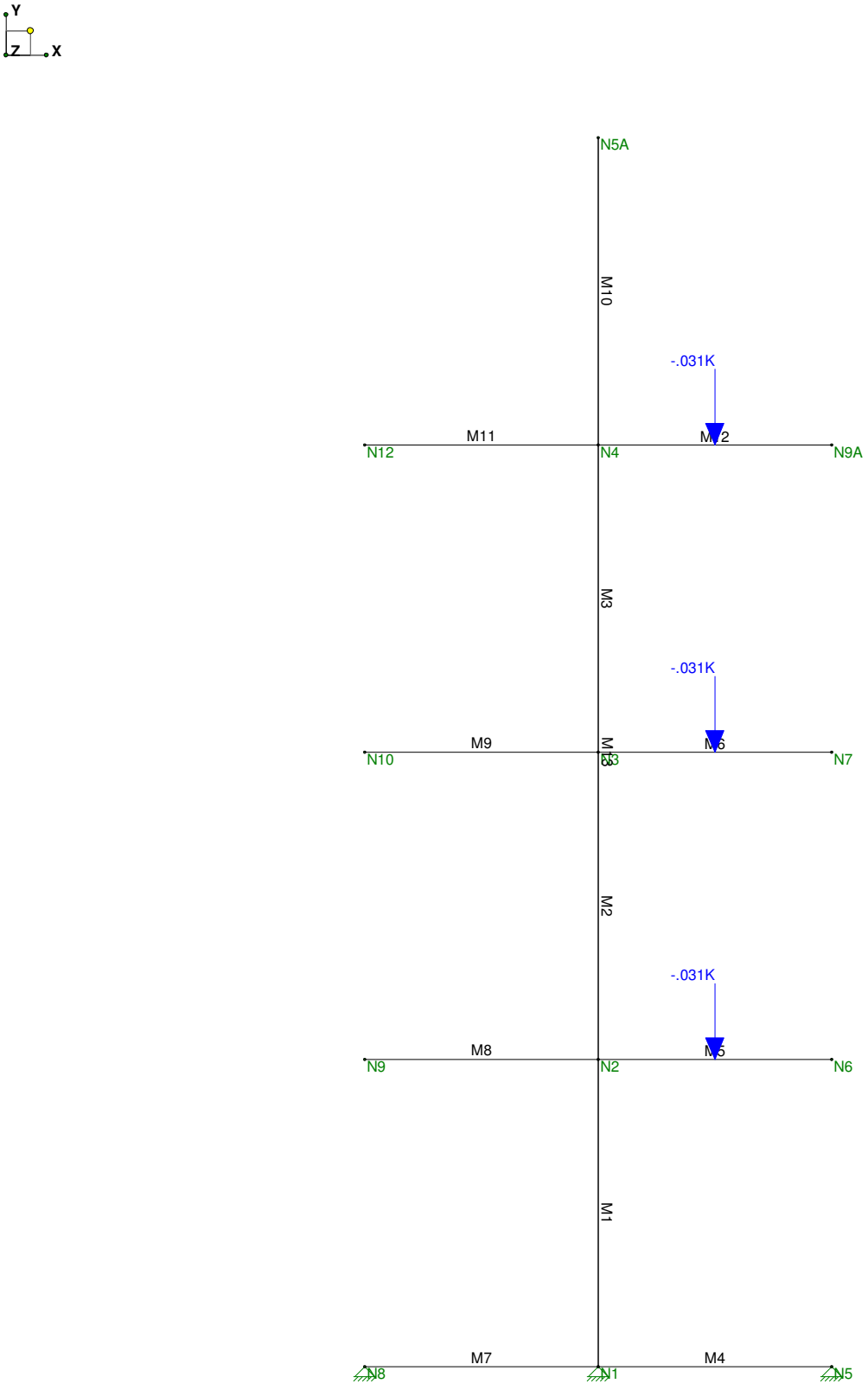

Loads: BLC 3, Fpv

NBZ Engineers	Toy Double Shelves	September 1, 2026
HZ		Toy Double Shelf- 3 shelves.r3d
26-011		

Company : **NBZ Engineers** September 1, 2026
Designer : **HZ**
Job Number : **26-011** **Toy Double Shelves** Checked By:_____

Global

Steel Code	AISC 9th Edition ASD
Allowable Stress Increase Factor (ASIF)	1.333
Include Shear Deformation	Yes
Include Warping	Yes
No. of Sections for Member Calcs	5
Redesign Sections	Yes
P-Delta Analysis Tolerance	0.50%
Vertical Axis	Y

Joint Coordinates

Joint Label	X Coordinate (Ft)	Y Coordinate (Ft)	Z Coordinate (Ft)	Joint Temperature (F)
N1	0	0	0	0
N2	0	1.75	0	0
N3	0	3.5	0	0
N4	0	5.25	0	0
N5A	0	7	0	0
N5	1.33	0	0	0
N6	1.33	1.75	0	0
N7	1.33	3.5	0	0
N9A	1.33	5.25	0	0
N8	-1.33	0	0	0
N9	-1.33	1.75	0	0
N10	-1.33	3.5	0	0
N12	-1.33	5.25	0	0

Boundary Conditions

Joint Label	X Translation (K/in)	Y Translation (K/in)	Z Translation (K/in)	MX Rotation (K-ft/rad)	MY Rotation (K-ft/rad)	MZ Rotation (K-ft/rad)
N1	Reaction	Reaction	Reaction			
N5	Reaction	Reaction	Reaction			
N8	Reaction	Reaction	Reaction			

Member Data

Member Label	I Node	J Node	K Node	X-Axis Rotate (degrees)	Section Set	End Releases I-End xyz xyz	End Releases J-End xyz xyz	End Offsets I-End (In)	End Offsets J-End (In)	Inactive Code	Member Length (Ft)
M1	N1	N2			SEC1						1.75
M2	N2	N3			SEC1						1.75
M3	N3	N4			SEC1						1.75
M4	N1	N5			SEC1						1.33
M5	N2	N6			SEC1						1.33
M6	N3	N7			SEC1						1.33
M7	N1	N8			SEC1						1.33
M8	N2	N9			SEC1						1.33
M9	N3	N10			SEC1						1.33
M10	N4	N5A			SEC1						1.75
M11	N4	N12			SEC1						1.33

Member Data (continued)

Member Label	I Node	J Node	K Node	X-Axis Rotate (degrees)	Section Set	End Releases I-End	End Releases J-End	End Offsets I-End (In)	End Offsets J-End (In)	Inactive	Length (Ft)
M12	N4	N9A			SEC1						1.33
M13	N5A	N1			SEC1						7

Basic Load Case Data

BLC No.	Basic Load Case Description	Category Code	Category Description	Load Type Totals Nodal	Point	Distributed	Surface
1	DL	DL	Dead Load		3		
2	Fph	EL	Earthquake Load		3		
3	Fpv	EL	Earthquake Load		3		

Distributed Load Patterns

Pattern Label	Direction	Start Magnitude (K/ft, F)	End Magnitude (K/ft, F)	Start Location (Ft or %)	End Location (Ft or %)
UNIFORM	Y	-1	-1	0	0

Member Point Loads, Category : DL, BLC 1 : DL

Member Label	I Joint	J Joint	Direction	Magnitude (K, K-ft)	Location (Ft or %)
M5	N2	N6	Y	-.2	.665
M6	N3	N7	Y	-.2	.665
M12	N4	N9A	Y	-.2	.665

Member Point Loads, Category : EL, BLC 2 : Fph

Member Label	I Joint	J Joint	Direction	Magnitude (K, K-ft)	Location (Ft or %)
M5	N2	N6	X	-.046	.665
M6	N3	N7	X	-.046	.665
M12	N4	N9A	X	-.046	.665

Member Point Loads, Category : EL, BLC 3 : Fpv

Member Label	I Joint	J Joint	Direction	Magnitude (K, K-ft)	Location (Ft or %)
M5	N2	N6	Y	-.031	.665
M6	N3	N7	Y	-.031	.665
M12	N4	N9A	Y	-.031	.665

Load Combinations

Num	Description	Env	WS	PD	SRSS	CD	BLC	Factor	BLC	Factor	BLC	Factor	BLC	Factor
1	DL+.7Fph+.7Fpv					1	1	1	2	.7	3	.7		
2	.6DL+.7Fph-.7Fpv					1	1	.6	2	.7	3	-.7		
3	1.2DL+2Fph+Fpv	y				1	1	1.2	2	2	3	1		
4	.9DL+2Fph-Fpv	y				1	1	.9	2	2	3	-1		

Envelope Reactions

Joint Label		X Force (K)	Lc	Y Force (K)	Lc	Z Force (K)	Lc	X Moment (K-ft)	Lc	Y Moment (K-ft)	Lc	Z Moment (K-ft)	Lc
N1	max	0.276	4	0.813	3	0.000	3	0.000	3	0.000	3	0.000	3
	min	0.276	3	0.447	4	0.000	3	0.000	3	0.000	3	0.000	3
N5	max	0.000	4	-0.16	3	0.000	3	0.000	3	0.000	3	0.000	3
	min	0.000	3	-0.251	4	0.000	3	0.000	3	0.000	3	0.000	3
N8	max	0.000	4	0.251	4	0.000	3	0.000	3	0.000	3	0.000	3
	min	0.000	3	0.16	3	0.000	3	0.000	3	0.000	3	0.000	3
Reaction Totals :	max	0.276	4	0.813	3	0.000	3						
	min	0.276	3	0.447	4	0.000	3						

Hilti PROFIS Engineering 3.1.34

www.hilti.com

Company:		Page:	1
Address:		Specifier:	
Phone I Fax:	|	E-Mail:	
Design:	Concrete - Aug 31, 2026	Date:	9/1/2026
Fastening point:			

Specifier's comments:

1 Input data



Anchor type and diameter:	**Kwik Bolt TZ2 - CS 3/8 (1 1/2) hnom1**
Item number:	2210236 KB-TZ2 3/8x3
Specification text:	HILTI ∅ 3/8 IN KWIK BOLT TZ2 - CS WITH 1.875 IN NOMINAL EMBEDMENT DEPTH PER ICC-ES ESR-4266 , HAMMER DRILL BIT INSTALLATION PER MPII
Effective embedment depth:	$h_{ef,act}$ = 1.500 in., h_{nom} = 1.875 in.
Material:	Carbon Steel
Evaluation Service Report:	ESR-4266
Issued I Valid:	12/1/2025 | 12/1/2027
Proof:	Design Method ACI 318-19 / Mech
Shear edge breakout verification:	Row closest to edge (Case 3 only from ACI 318-19 Fig. R.17.7.2.1b)
Stand-off installation:	e_b = 0.000 in. (no stand-off); t = 0.500 in.
Anchor plate[R] :	l_x x l_y x t = 1.500 in. x 6.500 in. x 0.500 in.; (Recommended plate thickness: not calculated)
Profile:	no profile
Base material:	cracked concrete, 3000, f_c' = 3,000 psi; h = 3.250 in.
Installation:	**Hammer drilled hole, Installation condition: Dry**
Reinforcement:	tension: not present, shear: not present; no supplemental splitting reinforcement present edge reinforcement: none or < No. 4 bar
Seismic loads (cat. C, D, E, or F)	Tension load: yes (17.10.5.3 (d)) Shear load: yes (17.10.6.3 (c))

[R] - The anchor calculation is based on a rigid anchor plate assumption.

Input data and results must be checked for conformity with the existing conditions and for plausibility!
PROFIS Engineering (c) 2003-2026 Hilti AG, FL-9494 Schaan Hilti is a registered Trademark of Hilti AG, Schaan

Hilti PROFIS Engineering 3.1.34

www.hilti.com

Company:		Page:	2
Address:		Specifier:	
Phone I Fax:	|	E-Mail:	
Design:	Concrete - Aug 31, 2026	Date:	9/1/2026
Fastening point:			

Geometry [in.] & Loading [lb, in.lb]

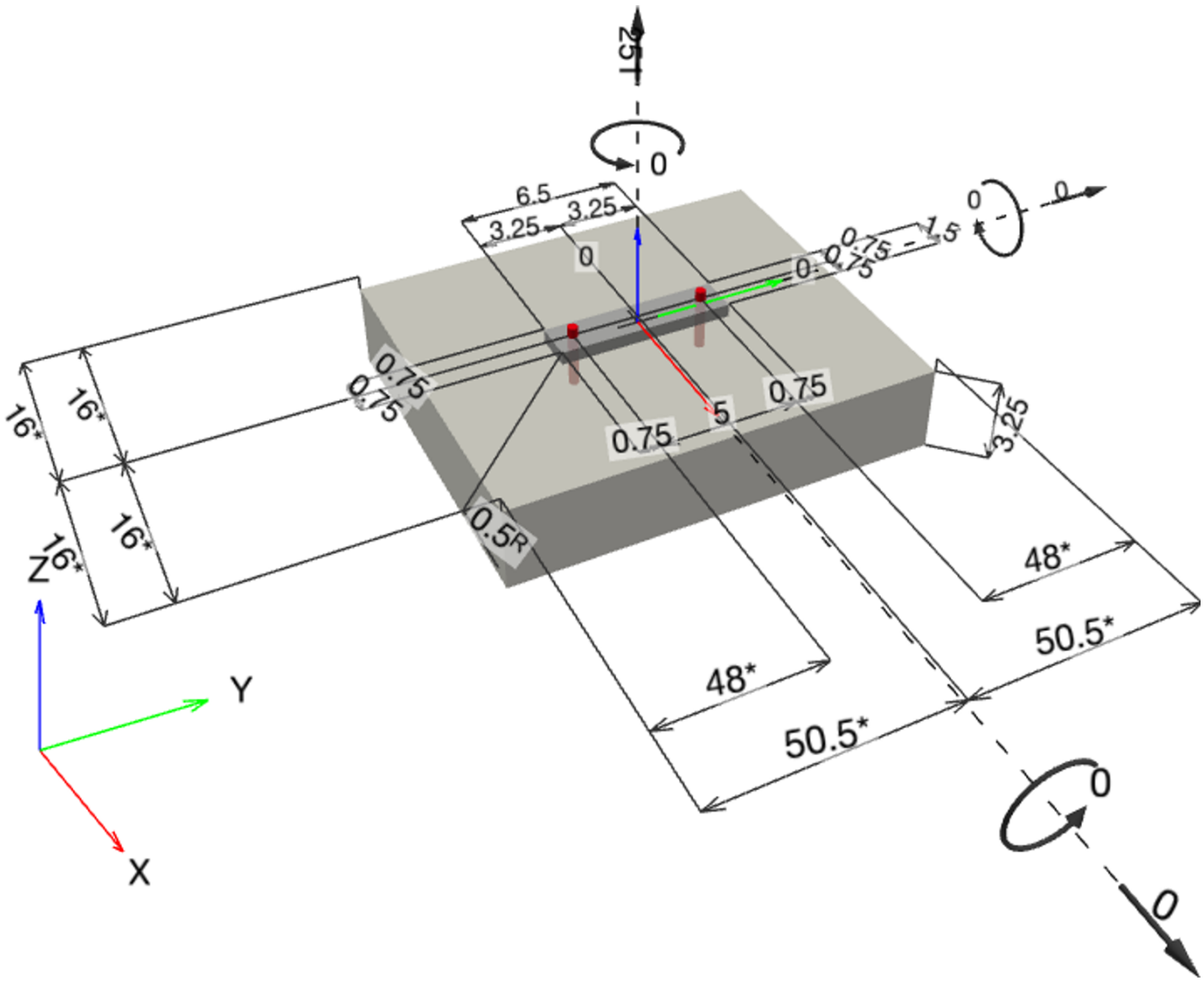

Input data and results must be checked for conformity with the existing conditions and for plausibility!
PROFIS Engineering (c) 2003-2026 Hilti AG, FL-9494 Schaan Hilti is a registered Trademark of Hilti AG, Schaan

Company:		Page:	3
Address:		Specifier:	
Phone I Fax:	|	E-Mail:	
Design:	Concrete - Aug 31, 2026	Date:	9/1/2026
Fastening point:			

1.1 Design results

Case	Description	Forces [lb] / Moments [in.lb]	Seismic	Max. Util. Anchor [%]
1	Combination 1	N = 251; V_x = 0; V_y = 0; M_x = 0; M_y = 0; M_z = 0;	yes	13

2 Load case/Resulting anchor forces

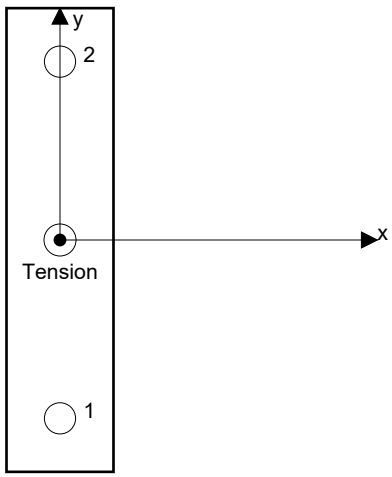

Anchor reactions [lb]

Tension force: (+Tension, -Compression)

Anchor	Tension force	Shear force	Shear force x	Shear force y
1	126	0	0	0
2	126	0	0	0

Max. concrete compressive strain: - [‰]
Max. concrete compressive stress: - [psi]
Resulting tension force in (x/y)=(0.000/0.000): 251 [lb]
Resulting compression force in (x/y)=(-/-): 0 [lb]

Anchor forces are calculated based on the assumption of a rigid anchor plate.

3 Tension load

	Load N_{ua} [lb]	Capacity ϕ N_n [lb]	Utilization $\beta_N = N_{ua}/\phi$ N_n	Status
Steel Strength*	126	4,869	3	OK
Pullout Strength*	N/A	N/A	N/A	N/A
Concrete Breakout Failure**	251	2,060	13	OK

* highest loaded anchor **anchor group (anchors in tension)

3.1 Steel Strength

N_{sa} [lb]	ϕ	ϕ N_{sa} [lb]	N_{ua} [lb]
6,493	0.750	4,869	126

3.2 Concrete Breakout Failure

A_{Nc} [in.^{2}]	A_{Nc0} [in.^{2}]	$c_{a,min}$ [in.]	c_{ac} [in.]	$\Psi_{c,N}$
40.50	20.25	16.000	5.000	1.000

$e_{c1,N}$ [in.]	$\Psi_{ec1,N}$	$e_{c2,N}$ [in.]	$\Psi_{ec2,N}$	$\Psi_{ed,N}$	$\Psi_{cp,N}$	k_{cr}
0.000	1.000	0.000	1.000	1.000	1.000	21

λ_a	N_b [lb]	ϕ	$\phi_{seismic}$	ϕ N_{cbg} [lb]	N_{ua} [lb]
1.000	2,113	0.650	0.750	2,060	251

Input data and results must be checked for conformity with the existing conditions and for plausibility!
PROFIS Engineering (c) 2003-2026 Hilti AG, FL-9494 Schaan Hilti is a registered Trademark of Hilti AG, Schaan

Company:		Page:	4
Address:		Specifier:	
Phone I Fax:	|	E-Mail:	
Design:	Concrete - Aug 31, 2026	Date:	9/1/2026
Fastening point:			

4 Shear load

	Load V_{ua} [lb]	Capacity ϕ V_n [lb]	Utilization $\beta_V = V_{ua}/\phi$ V_n	Status
Steel Strength*	N/A	N/A	N/A	N/A
Steel failure (with lever arm)*	N/A	N/A	N/A	N/A
Pryout Strength*	N/A	N/A	N/A	N/A
Concrete edge failure in direction **	N/A	N/A	N/A	N/A

* highest loaded anchor **anchor group (relevant anchors)

5 Warnings

- The anchor design methods in PROFIS Engineering require rigid anchor plates per current regulations (EN1992-4, AS5216, etc.). This means load re-distribution on the anchors due to elastic deformations of the anchor plate are not considered - the anchor plate is assumed to be sufficiently stiff, in order not to be deformed when subjected to the design loading. PROFIS Engineering calculates the minimum required anchor plate thickness with FEM to limit the stress of the anchor plate based on the assumptions explained above. The proof if the rigid anchor plate assumption is valid is not carried out by PROFIS Engineering. Input data and results must be checked for agreement with the existing conditions and for plausibility!
- The equations presented in this report are based on imperial units. When inputs are displayed in metric units, the user should be aware that the equations remain in their imperial format.
- Condition A applies where the potential concrete failure surfaces are crossed by supplementary reinforcement proportioned to tie the potential concrete failure prism into the structural member. Condition B applies where such supplementary reinforcement is not provided, or where pullout or pryout strength governs.
- Refer to the manufacturer's product literature for cleaning and installation instructions.
- For additional information about ACI 318 strength design provisions, please go to https://viewer.joomag.com/profis-design-guide-us-en-summer-2021/0841849001625154758?short&/
- "An anchor design approach for structures assigned to Seismic Design Category C, D, E or F is given in ACI 318-19, Chapter 17, Section 17.10.5.3 (a) that requires the governing design strength of an anchor or group of anchors be limited by ductile steel failure. If this is NOT the case, the connection design (tension) shall satisfy the provisions of Section 17.10.5.3 (b), Section 17.10.5.3 (c), or Section 17.10.5.3 (d). The connection design (shear) shall satisfy the provisions of Section 17.10.6.3 (a), Section 17.10.6.3 (b), or Section 17.10.6.3 (c)."
- Section 17.10.5.3 (b) / Section 17.10.6.3 (a) require the attachment the anchors are connecting to the structure be designed to undergo ductile yielding at a load level corresponding to anchor forces no greater than the controlling design strength. Section 17.10.5.3 (c) / Section 17.10.6.3 (b) waive the ductility requirements and require the anchors to be designed for the maximum tension / shear that can be transmitted to the anchors by a non-yielding attachment. Section 17.10.5.3 (d) / Section 17.10.6.3 (c) waive the ductility requirements and require the design strength of the anchors to equal or exceed the maximum tension / shear obtained from design load combinations that include E, with E increased by ω_0.
- Hilti post-installed anchors shall be installed in accordance with the Hilti Manufacturer's Printed Installation Instructions (MPII). Reference ACI 318-19, Section 26.7.

Fastening meets the design criteria!

PROFIS Engineering (c) 2003-2026 Hilti AG, FL-9494 Schaan Hilti is a registered Trademark of Hilti AG, Schaan

Company:		Page:	5
Address:		Specifier:	
Phone I Fax:	|	E-Mail:	
Design:	Concrete - Aug 31, 2026	Date:	9/1/2026
Fastening point:			

6 Installation data

Anchor type and diameter: Kwik Bolt TZ2 - CS 3/8 (1 1/2) hnom1

Profile: no profile

Item number: 2210236 KB-TZ2 3/8x3

Hole diameter in the fixture: d_f = 0.438 in.

Maximum installation torque: 361 in.lb

Plate thickness (input): 0.500 in.

Hole diameter in the base material: 0.375 in.

Recommended plate thickness: not calculated

Hole depth in the base material: 2.000 in.

Drilling method: Hammer drilled

Minimum thickness of the base material: 3.250 in.

Cleaning: Manual cleaning of the drilled hole according to instructions for use is required.

Hilti ∅ 3/8 in Kwik Bolt TZ2 - CS with 1.875 in nominal embedment depth per ICC-ES ESR-4266 , Hammer drill bit installation per MPII

6.1 Recommended accessories

Drilling	Cleaning	Setting
• Suitable Rotary Hammer • Properly sized drill bit	• Manual blow-out pump	• Torque controlled cordless impact tool • Torque wrench • Hammer

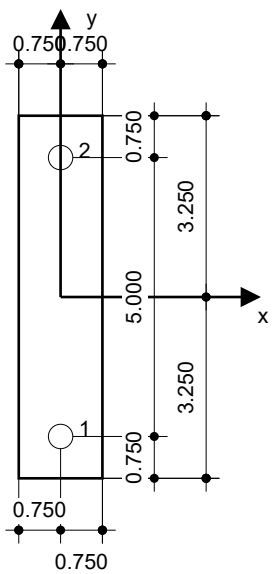

Coordinates Anchor [in.]

Anchor	x	y	c_{-x}	c_{+x}	c_{-y}	c_{+y}
1	0.000	-2.500	16.000	16.000	48.000	53.000
2	0.000	2.500	16.000	16.000	53.000	48.000

Input data and results must be checked for conformity with the existing conditions and for plausibility!
PROFIS Engineering (c) 2003-2026 Hilti AG, FL-9494 Schaan Hilti is a registered Trademark of Hilti AG, Schaan

Hilti PROFIS Engineering 3.1.34

www.hilti.com

Company:		Page:	1
Address:		Specifier:	
Phone I Fax:	|	E-Mail:	
Design:	Concrete - Aug 31, 2026	Date:	9/2/2026
Fastening point:			

Specifier's comments:

1 Input data



Anchor type and diameter:	**Kwik Bolt TZ2 - CS 3/8 (1 1/2) hnom1**
Item number:	2210236 KB-TZ2 3/8x3
Specification text:	HILTI ∅ 3/8 IN KWIK BOLT TZ2 - CS WITH 1.875 IN NOMINAL EMBEDMENT DEPTH PER ICC-ES ESR-4266 , HAMMER DRILL BIT INSTALLATION PER MPII
Effective embedment depth:	$h_{ef,act}$ = 1.500 in., h_{nom} = 1.875 in.
Material:	Carbon Steel
Evaluation Service Report:	ESR-4266
Issued I Valid:	12/1/2025 | 12/1/2027
Proof:	Design Method ACI 318-19 / Mech
Shear edge breakout verification:	Row closest to edge (Case 3 only from ACI 318-19 Fig. R.17.7.2.1b)
Stand-off installation:	e_b = 0.000 in. (no stand-off); t = 0.500 in.
Anchor plate[R] :	l_x x l_y x t = 1.500 in. x 6.500 in. x 0.500 in.; (Recommended plate thickness: not calculated)
Profile:	no profile
Base material:	cracked concrete, 3000, f_c' = 3,000 psi; h = 3.250 in.
Installation:	**Hammer drilled hole, Installation condition: Dry**
Reinforcement:	tension: not present, shear: not present; no supplemental splitting reinforcement present edge reinforcement: none or < No. 4 bar
Seismic loads (cat. C, D, E, or F)	Tension load: yes (17.10.5.3 (d)) Shear load: yes (17.10.6.3 (c))

[R] - The anchor calculation is based on a rigid anchor plate assumption.

Input data and results must be checked for conformity with the existing conditions and for plausibility!
PROFIS Engineering (c) 2003-2026 Hilti AG, FL-9494 Schaan Hilti is a registered Trademark of Hilti AG, Schaan

Hilti PROFIS Engineering 3.1.34

www.hilti.com

Company:		Page:	2
Address:		Specifier:	
Phone I Fax:	|	E-Mail:	
Design:	Concrete - Aug 31, 2026	Date:	9/2/2026
Fastening point:			

Geometry [in.] & Loading [lb, in.lb]

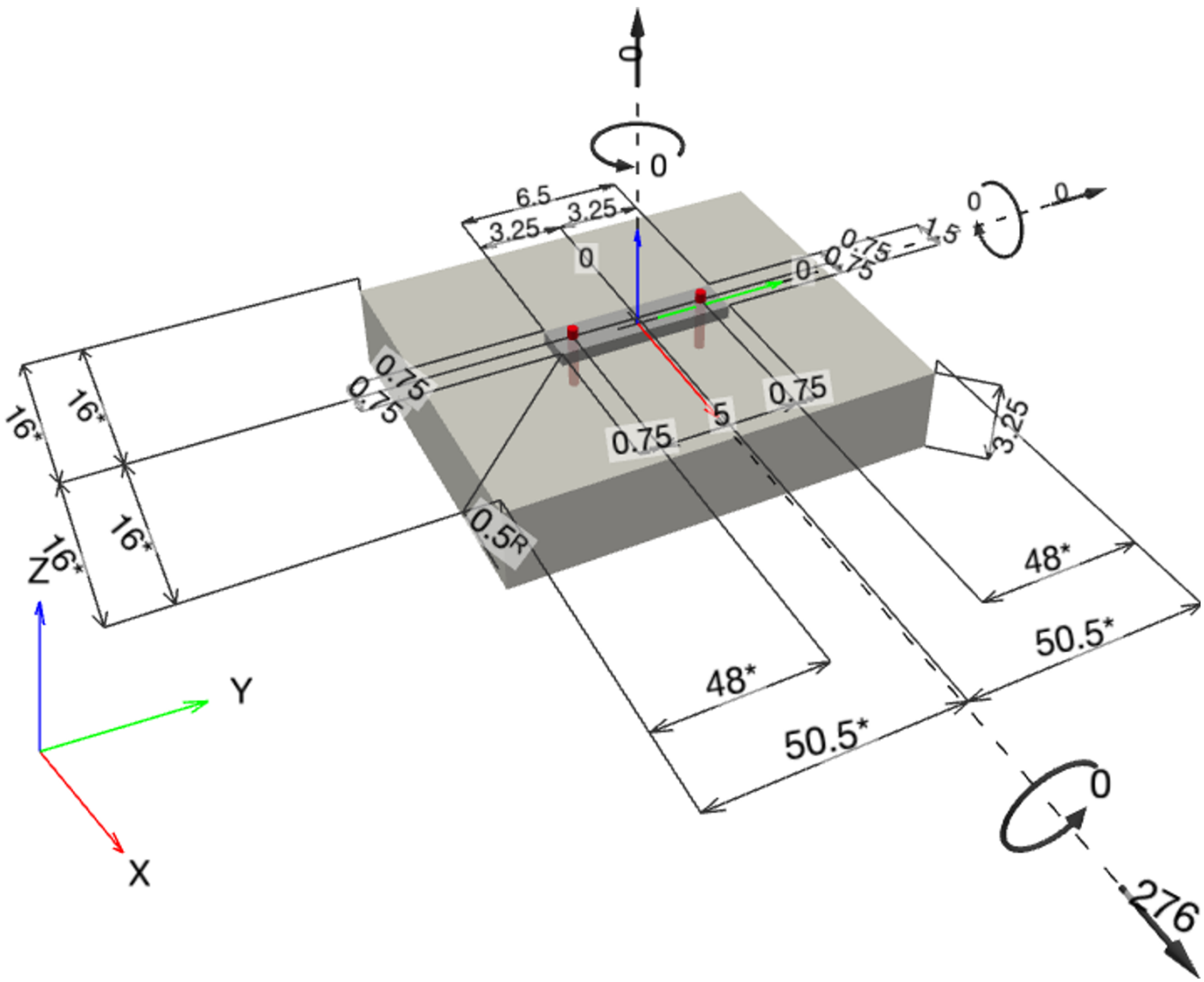

Input data and results must be checked for conformity with the existing conditions and for plausibility!
PROFIS Engineering (c) 2003-2026 Hilti AG, FL-9494 Schaan Hilti is a registered Trademark of Hilti AG, Schaan

Hilti PROFIS Engineering 3.1.34

www.hilti.com

Company:		Page:	3
Address:		Specifier:	
Phone I Fax:	|	E-Mail:	
Design:	Concrete - Aug 31, 2026	Date:	9/2/2026
Fastening point:			

1.1 Design results

Case	Description	Forces [lb] / Moments [in.lb]	Seismic	Max. Util. Anchor [%]
1	Combination 1	N = 0; V_x = 276; V_y = 0; M_x = 0; M_y = 0; M_z = 0;	yes	10

2 Load case/Resulting anchor forces

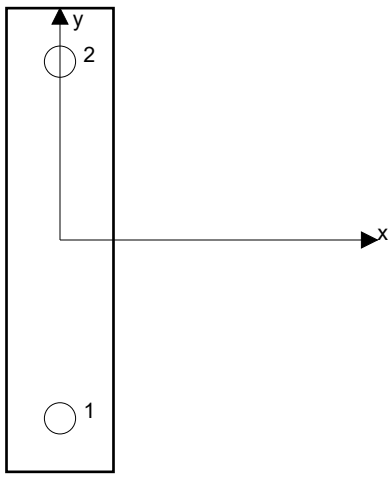

Anchor reactions [lb]

Tension force: (+Tension, -Compression)

Anchor	Tension force	Shear force	Shear force x	Shear force y
1	0	138	138	0
2	0	138	138	0

Max. concrete compressive strain: - [‰]
Max. concrete compressive stress: - [psi]
Resulting tension force in (x/y)=(-/-): 0 [lb]
Resulting compression force in (x/y)=(-/-): 0 [lb]

Anchor forces are calculated based on the assumption of a rigid anchor plate.

3 Tension load

	Load N_{ua} [lb]	Capacity ϕ N_n [lb]	Utilization $\beta_N = N_{ua}/\phi$ N_n	Status
Steel Strength*	N/A	N/A	N/A	N/A
Pullout Strength*	N/A	N/A	N/A	N/A
Concrete Breakout Failure**	N/A	N/A	N/A	N/A

* highest loaded anchor **anchor group (anchors in tension)

Input data and results must be checked for conformity with the existing conditions and for plausibility!
PROFIS Engineering (c) 2003-2026 Hilti AG, FL-9494 Schaan Hilti is a registered Trademark of Hilti AG, Schaan

Hilti PROFIS Engineering 3.1.34

www.hilti.com

Company:		Page:	4
Address:		Specifier:	
Phone I Fax:	|	E-Mail:	
Design:	Concrete - Aug 31, 2026	Date:	9/2/2026
Fastening point:			

4 Shear load

	Load V_{ua} [lb]	Capacity ϕ V_n [lb]	Utilization $\beta_V = V_{ua}/\phi$ V_n	Status
Steel Strength*	138	2,097	7	OK
Steel failure (with lever arm)*	N/A	N/A	N/A	N/A
Pryout Strength**	276	2,958	10	OK
Concrete edge failure in direction x+**	276	5,639	5	OK

* highest loaded anchor **anchor group (relevant anchors)

4.1 Steel Strength

V_{sa} [lb]	$\alpha_{V,seis}$	ϕ	ϕ V_{sa} [lb]	V_{ua} [lb]
3,226	1.000	0.650	2,097	138

4.2 Pryout Strength

A_{Nc} [in.^{2}]	A_{Nc0} [in.^{2}]	$c_{a,min}$ [in.]	k_{cp}	c_{ac} [in.]	$\Psi_{c,N}$
40.50	20.25	16.000	1	5.000	1.000

$e_{c1,V}$ [in.]	$\Psi_{ec1,V}$	$e_{c2,V}$ [in.]	$\Psi_{ec2,V}$	$\Psi_{ed,N}$	k_{cr}
0.000	1.000	0.000	1.000	1.000	21

λ_a	N_b [lb]	ϕ	$\phi_{seismic}$	ϕV_{cpg} [lb]	V_{ua} [lb]
1.000	2,113	0.700	1.000	2,958	276

4.3 Concrete edge failure in direction x+

l_e [in.]	d_a [in.]	c_{a1} [in.]	A_{Vc} [in.^{2}]	A_{Vc0} [in.^{2}]
1.500	0.375	16.000	172.25	1,152.00

$\Psi_{ed,V}$	$\Psi_{parallel,V}$	$e_{c,V}$ [in.]	$\Psi_{ec,V}$	$\Psi_{c,V}$	$\Psi_{h,V}$
1.000	1.000	0.000	1.000	1.000	2.717

λ_a	V_b [lb]	ϕ	$\phi_{seismic}$	ϕV_{cbg} [lb]	V_{ua} [lb]
1.000	19,827	0.700	1.000	5,639	276

Input data and results must be checked for conformity with the existing conditions and for plausibility!
PROFIS Engineering (c) 2003-2026 Hilti AG, FL-9494 Schaan Hilti is a registered Trademark of Hilti AG, Schaan

Company:		Page:	5
Address:		Specifier:	
Phone I Fax:	|	E-Mail:	
Design:	Concrete - Aug 31, 2026	Date:	9/2/2026
Fastening point:			

5 Warnings

- The anchor design methods in PROFIS Engineering require rigid anchor plates per current regulations (EN1992-4, AS5216, etc.). This means load re-distribution on the anchors due to elastic deformations of the anchor plate are not considered - the anchor plate is assumed to be sufficiently stiff, in order not to be deformed when subjected to the design loading. PROFIS Engineering calculates the minimum required anchor plate thickness with FEM to limit the stress of the anchor plate based on the assumptions explained above. The proof if the rigid anchor plate assumption is valid is not carried out by PROFIS Engineering. Input data and results must be checked for agreement with the existing conditions and for plausibility!
- The equations presented in this report are based on imperial units. When inputs are displayed in metric units, the user should be aware that the equations remain in their imperial format.
- Condition A applies where the potential concrete failure surfaces are crossed by supplementary reinforcement proportioned to tie the potential concrete failure prism into the structural member. Condition B applies where such supplementary reinforcement is not provided, or where pullout or pryout strength governs.
- Refer to the manufacturer's product literature for cleaning and installation instructions.
- For additional information about ACI 318 strength design provisions, please go to https://viewer.joomag.com/profis-design-guide-us-en-summer-2021/0841849001625154758?short&/
- "An anchor design approach for structures assigned to Seismic Design Category C, D, E or F is given in ACI 318-19, Chapter 17, Section 17.10.5.3 (a) that requires the governing design strength of an anchor or group of anchors be limited by ductile steel failure. If this is NOT the case, the connection design (tension) shall satisfy the provisions of Section 17.10.5.3 (b), Section 17.10.5.3 (c), or Section 17.10.5.3 (d). The connection design (shear) shall satisfy the provisions of Section 17.10.6.3 (a), Section 17.10.6.3 (b), or Section 17.10.6.3 (c)."
- Section 17.10.5.3 (b) / Section 17.10.6.3 (a) require the attachment the anchors are connecting to the structure be designed to undergo ductile yielding at a load level corresponding to anchor forces no greater than the controlling design strength. Section 17.10.5.3 (c) / Section 17.10.6.3 (b) waive the ductility requirements and require the anchors to be designed for the maximum tension / shear that can be transmitted to the anchors by a non-yielding attachment. Section 17.10.5.3 (d) / Section 17.10.6.3 (c) waive the ductility requirements and require the design strength of the anchors to equal or exceed the maximum tension / shear obtained from design load combinations that include E, with E increased by ω_0.
- Hilti post-installed anchors shall be installed in accordance with the Hilti Manufacturer's Printed Installation Instructions (MPII). Reference ACI 318-19, Section 26.7.

Fastening meets the design criteria!

PROFIS Engineering (c) 2003-2026 Hilti AG, FL-9494 Schaan Hilti is a registered Trademark of Hilti AG, Schaan

Company:		Page:	6
Address:		Specifier:	
Phone I Fax:	|	E-Mail:	
Design:	Concrete - Aug 31, 2026	Date:	9/2/2026
Fastening point:			

6 Installation data

Anchor type and diameter: Kwik Bolt TZ2 - CS 3/8 (1 1/2) hnom1

Profile: no profile

Item number: 2210236 KB-TZ2 3/8x3

Hole diameter in the fixture: d_f = 0.438 in.

Maximum installation torque: 361 in.lb

Plate thickness (input): 0.500 in.

Hole diameter in the base material: 0.375 in.

Recommended plate thickness: not calculated

Hole depth in the base material: 2.000 in.

Drilling method: Hammer drilled

Minimum thickness of the base material: 3.250 in.

Cleaning: Manual cleaning of the drilled hole according to instructions for use is required.

Hilti ∅ 3/8 in Kwik Bolt TZ2 - CS with 1.875 in nominal embedment depth per ICC-ES ESR-4266 , Hammer drill bit installation per MPII

6.1 Recommended accessories

Drilling	Cleaning	Setting
• Suitable Rotary Hammer • Properly sized drill bit	• Manual blow-out pump	• Torque controlled cordless impact tool • Torque wrench • Hammer

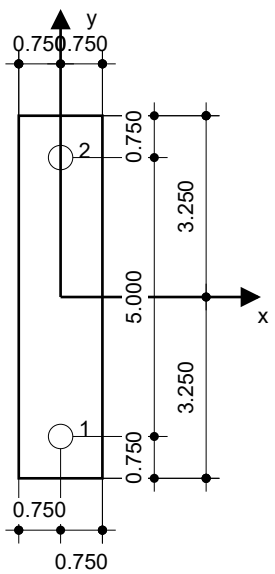

Coordinates Anchor [in.]

Anchor	x	y	c_{-x}	c_{+x}	c_{-y}	c_{+y}
1	0.000	-2.500	16.000	16.000	48.000	53.000
2	0.000	2.500	16.000	16.000	53.000	48.000

Input data and results must be checked for conformity with the existing conditions and for plausibility!
PROFIS Engineering (c) 2003-2026 Hilti AG, FL-9494 Schaan Hilti is a registered Trademark of Hilti AG, Schaan